WESTBROOK CITY COUNCIL
REGULAR CITY COUNCIL MEETING AGENDA
MONDAY AUGUST 3, 2020 AT 7:00 PM
WESTBROOK PERFORMING ARTS CENTER, 471 STROUDWATER ST.

I. ROLL CALL

II. PLEDGE OF ALLEGIANCE

III. APPROVAL OF MINUTES

July 27, 2020	Public Safety Committee Meeting; Special City Council Meeting

IV. MAYOR'S MESSAGE

V. STUDENT REPRESENTATIVE UPDATE

VI. PUBLIC COMMENT

VII. UNFINISHED BUSINESS

VIII. ORDERS OF THE DAY (SECOND AND FINAL READING)

Order 2020-78*	Amending Land Use Ordinance Regarding Sign Regulations
Order 2020-79	Authorizing Expenditure for Agenda Management System
Order 2020-80	Authorizing Amendment and Additional Expenditure for Engineering Services for Downtown Lighting
Order 2020-81	Authorizing Expenditure for Police Department Training & Duty Ammunition
Order 2020-82	Approving Emergency Expenditure for Police Department Protective Gear
Order 2020-83	Authorizing Award of Bid for Police Department Patrol Room Renovations
Order 2020-84	Authorizing Reimbursement for Police Officer Training Costs
Order 2020-85	Authorizing Westbrook Environmental Improvement Corporation (WEIC) Expenditure for Due Diligence Services at Mechanic Street Parking Lot
Order 2020-86	Authorizing Community Policing Sub-Station Rent Payments
Order 2020-87	Authorizing Saco/Eisenhower Street Intersection MPI Agreement
Order 2020-88	Authorizing Eisenhower/Spring Street MDOT BPI Intersection Project Construction/Perpetual Easement Compensation
Order 2020-89	Authorizing Second & Final Payment for Simulcast Transmitter/Receiver Site & Amending Annual Vendor List
Order 2020-90	Authorizing a Utility Easement at 5 Bradley Drive (5 Bradley Drive Westbrook, LLC)

**This item requires a public hearing. Notice of the public hearing was published in the Portland Press Herald on July 22 & 27, 2020.*

IX. NEW BUSINESS

Orders (One Reading Required)

Order 2020-91	Authorizing Acceptance of Easements for MDOT Projects
Order 2020-92	Authorizing Purchase of Police Desks

Order 2020-93	Approving Administrative Updates to the Downtown Façade Improvement Program

Orders (Two Readings Required)

Order 2020-94	Authorizing Reallocation of Funds for County Road Pump Station Project
Order 2020-95	Authorizing Award of Bid for Public Safety Building Assessment
Order 2020-96	Authorizing Award of Bid for Unmarked Police Vehicle
Order 2020-97	Authorizing Appropriation of Recreation and Conservation Commission Open Space Funds for the Cornelia Warren 4-Season Rink Project
Order 2020-98	Authorizing Purchase of Replacement Voice/Radio Recorder System
Order 2020-99	Authorizing Acceptance of Asset Forfeiture Funds
Order 2020-100	Authorizing Payment for Annual Email Archive Maintenance Support & Amending Annual Vendor List
Order 2020-101	Authorizing Award of Bid for Two Police Cruisers

X. PUBLIC COMMENT

XI. REFERRALS

Facilities & Streets Committee
Installation of Street Light at 23 Everett Street

XII. COMMITTEE REPORTS

Committee of the Whole
Hours for Construction & Noise Ordinance
Residential Landlord Registration
City Council Rules & Procedures

Facilities & Streets Committee
Austin Street Extension
Reducing Speed Limit on Lincoln Street
Sidewalks & Traffic at Haskell Street
Condition of Westbrook Middle School Baseball Field
Traffic Issues on Forest Street

Finance
Creating a Fire Truck Fund

XIII. EXECUTIVE SESSION

XIV. ADJOURNMENT

Westbrook, Maine
MAYOR'S OFFICE

Mayor Michael T. Foley
2 York Street
Westbrook, Maine 04092
Phone: 207-591-8110
Fax: 877-688-9553

To: Honorable City Council
From: Jerre R. Bryant, City Administrator
Date: July 29, 2020
Subject: Position Paper for City Council Meeting of August 3, 2020

ORDERS OF THE DAY

2020-78 This is a **Public Hearing** on a comprehensive re-write of Section 404 Sign Regulations of the Land Use Ordinance. In February of this year, the City Council referred temporary sign regulations to the Planning Board for review and recommendations. In the course of that review process, the Board took a look at the entire sign regulatory structure and has developed a more comprehensive repeal and replacement recommendation. The enclosed five page memo from Planning & Code Enforcement Director Jennie Franceschi provides a very concise overview of the changes recommend by the Planning Board. Jennie will be at Monday's meeting to respond to any questions. This amendment to the Land Use Ordinance is recommended by the Planning Board, is supported by the Administration, was given first reading on July 6, 2020 and, following the public hearing, is in order for final City Council action.

2020-79 This authorizes the purchase of agenda management software from CivicPlus of Manhattan, Kansas at a purchase price of $8,000. This item is funded in the FY 2021 Budget and is more fully explained in the enclosed request from the City Clerk. This purchase is supported by the Administration, was given first reading on July 6, 2020 and is in order for final City Council action.

2020-80 In the fall of 2018, the City engaged the engineering firm of Wright-Pierce of Portland to develop engineering and design specifications for the replacement light poles and fixtures throughout the downtown. This work was in preparation for the eventual replacement of the existing 1970's vintage equipment, including a conversion to more effective and energy efficient LED fixtures. This design process got a late start and has experienced a couple delays and some unanticipated challenges that have resulted in adjustment to the scope of this project. In order to complete this process we are looking at an additional cost of $10,000. As requested at first reading, a copy of the original award of bid from September, 2018 is enclosed. City Engineer Eric Dudley will be at Monday's meeting to update the Council on this project and respond to any questions. Authorization of this additional expenditure is supported by the

Administration, was given first reading on July 6, 2020 and is in order for final City Council action.

2020-81 This authorizes the purchase of training and duty ammunition for the Police Department from AAA Police Supply, Dedham, Massachusetts at a total cost of $4,810. This purchase in made under a group municipal purchase agreement for over thirty towns and cities. This purchase is funded in the Police Department operating budget. This purchase is supported by the Administration, was given first reading on July 6, 2020 and is in order for final City Council action.

2020-82 This authorizes the purchase of ten (10) sets of field protective gear for the Police Department from Witmer Public Safety Group, Coatesville, Pennsylvania at a purchase price of $4,665.70. A contingent of Westbrook officers recently completed a FEMA sponsored field training operation. As qualified field operations officers, they were called upon to assist the Portland Police Department under the mutual aid agreement among departments throughout the region. Having not previously been provided with appropriate field protective gear, ten sets were purchased on an emergency basis for the safety of our officers. This purchase is now before the City Council for their approval as provided under the City's Purchasing Ordinance. Approval of this purchase is supported by the Administration, was given first reading on July 6, 2020 and is in order for final City Council action.

2020-83 This is an award of bid for repairs and renovations at the Public Safety Building. The City received two bids for this work, with the low bid submitted by Punch Construction Services, Waterville, Maine at a bid price of $21,320. The specifications for this work are itemized in the enclosed proposal from the contractor. This work is funded in the FY 2020 Capital Improvement Program. This award of bid is supported by the Administration, was given first reading on July 6, 2020 and is in order for final City Council action.

2020-84 This authorizes payment of $24,000 to the Town of Old Orchard Beach to cover Westbrook's pro-rated share of the Criminal Justice Academy expenses for a recently hired officer previously employed at the OOB Police Department. If a police officer is sent to the MCJA as an employee of one community and goes to another department within five years of the Academy training, the new community has to reimburse the prior department on a pro-rated basis. In this specific case, the officer spent just over a year in OOB following the Academy which is why the reimbursement is so high. This cost is charged to the department's training budget. This payment is supported by the Administration, was given first reading on July 6, 2020 and is in order for final City Council action.

2020-85 This authorizes the expenditure of WEIC funds, not to exceed $57,200, to perform due diligence and project management, and further authorizes S.W. Cole Engineering and

Owen Haskell, Inc. to provide survey, environmental site assessment and geotechnical/geophysical investigation to determine the suitability of the Mechanic Street Parking Lot property for development. This work is the responsibility of the City under the Memorandum of Understanding (MOU) with the developer of the proposed Vertical Harvest, residential and parking garage construction on this site. Funding was approved unanimously by the WEIC Board of Directors in recognition of the economic impact and opportunities this project presents for downtown Westbrook. This authorization is supported by the Administration, was given first reading on July 27, 2020 and is in order for final City Council action.

2020-86 This authorizes payment of rent for FY 2020-21 for the Westbrook Police Department's Community Policing Sub-Station located at 192 Brown Street, at a total cost of $18,000 ($1,500 per month), to be funded utilizing the cruiser fee revenue account. This authorization is supported by the Administration, was given first reading on July 27, 2020 and is in order for final City Council action.

2020-87 This authorizes the enclosed Municipal Partnership Agreement between the Maine Department of Transportation (MDOT) and the City of Westbrook, for the expansion and signalization of the Eisenhower Drive/Saco Street intersection, and further authorizes an allocation of $350,000 from the Eisenhower Drive Improvement account as part of the local funding for this project. The full agreement and an explanatory memo from Director of Planning & Code Enforcement Jennie Franceschi is enclosed. This project provides for full signalization of the Eisenhower Drive/Saco Street intersection and includes the addition and extension of turning lanes on both Eisenhower Drive and Saco Street. Both Idexx and Abbott Laboratories are financially participating in the cost of this project. Authorization of this agreement and funding allocation are supported by the Administration, were given first reading on July 27, 2020 and are in order for final City Council action.

2020-88 This authorizes payment in the amount of $5,400 for both permanent grading and drainage easements and a temporary construction easement from Lighthouse Christian Church, 636 Spring Street to accommodate the reconstruction of the Eisenhower Drive/Spring Street intersection and the creation/extension of turning lanes along Spring Street. The compensation amount of $5,400 for the easements is acceptable to the Church and complies with MDOT standards. Payment authorization for these easements is supported by the Administration, was given first reading on July 27, 2020 and is in order for final City Council action.

2020-89 This authorizes payment in the amount of $14,940.32 to Radio Communications Management, Inc. of Portland for the cost of a simulcast transmitter/receiver at the Public Safety Building. This project was authorized by the City Council in April, with 50% of the cost funded with the remaining balance available in the Digital Radio System Conversion Project account and the remaining balance to be funded in the FY2020-21

budget and payable in July. All terms were approved in the city council order adopted on May 4th with the exception of the actual payment authorization, because those funds had not yet been appropriated. This order further adds this vendor to the annual vendor list for the IT - hardware account. This authorization is supported by the Administration, was given first reading on July 27, 2020 and is in order for final City Council action.

2020-90 This authorizes the granting of a utility easement to 5 Bradley Drive Westbrook LLC along the edge of City owned property adjacent to 5 Bradley Drive. The purpose of this utility easement is to accommodate an increase in the power supply to this property in order to meet the needs of Abbott Laboratories, who are in the process of renovating the former Olympia Sports administrative offices, warehouse and distribution center into a medical technology production facility. The City is working closely with Abbott and CMP on the growth of this exciting business that is expanding into Westbrook. What was originally requested as a single utility easement to Central Maine Power Company is actually two easements, one to CMP, which was approved at the last City Council meeting, and a second to the owner of 5 Bradley Drive. The split reflects the point at which ownership of the electrical line changes ownership from the utility to the business owner. This easement has been approved by legal counsel, is supported by the Administration, was given first reading on July 27, 2020 and is in order for final City Council action.

NEW BUSINESS

One-Reading Orders

2020-91 This authorizes the acceptance of four easements that have been negotiated by the city to facilitate two MDOT intersection projects, Eisenhower Drive @ Spring Street and Bridge Street @ Cumberland Street. Funding for these easements is from the respective MDOT Capital Projects. The cost of the easements from the Lighthouse Christian Church exceeded $3,000 requiring separate City Council expenditure approval, while the other three were each under $3,000. This item just involves the acceptance of the easements for these two projects. Acceptance of these easements is supported by the Administration and is in order for final City Council action.

2020-92 This authorizes the purchase of two (2) desks for the Police Department's Patrol Room from TAB Office Systems at a total cost of $1,541. This purchase is part of the ongoing Patrol Room Renovation Project funded in the FY 2020 Capital Improvement Program. While this amount would typically not require Council approval, being under the $3,000 threshold limit outlined in our Code of Ordinances for department expenditures, the use of Capital Funds does require Council approval. This purchase request is supported by the Administration and is in order for final City Council action.

2020-93 This authorizes administrative updates to the Downtown Façade Improvement Program, originally adopted in 2018, and expanded in 2019. This program has been very successful as it continues to assist downtown businesses in updating their building facades. These administrative updates streamline the application process to make it more user-friendly for applicants and makes program administration more efficient. Changes include clarifying the administration of the program by the Economic Development Department, improves consistency in language, removes redundancies, corrects grammatical errors, specifies the supporting documentation required for application review, and matches the language of the application to that of the program guidelines. This request is supported by the Administration and is in order for final City Council action.

Two-Reading Orders

2020-94 This authorizes the reallocation of $83,000 from available balances from other completed sewer projects to the County Road Pump Station project. This has been a challenging project, with the additional costs primarily related to unstable sub-surface soil conditions that have required additional sheathing for stability, a significantly modified drainage swale and additional reinforcement of the access driveway. The purchase of a pump hoist was a planned purchase outside of the construction contract. Funding is available from other sewer projects that have been completed under budget. This funding reallocation is supported by the Administration and is in order for first reading.

2020-95 This authorizes an award of bid to Port City Architecture, Portland, Maine, for space planning and security consultation at the Public Safety Building at a cost not to exceed $19,488. Since the PSB opened in 2004, all three of the public safety departments have experience increased staffing and changes in operations that necessitate a look at the building configuration and space allocation. Additionally, security concerns have been raised regarding access into and throughout the facility. The purpose of conducting a comprehensive review of the building and its changing needs is to identify the most practical and cost effective options for achieving functional improvements at the facility. The city received three bids for this work and Port City Architects was selected base on their experience, approach and cost. This work is funded in the 2019/20 Capital Improvement Program. This award of bid is supported by the Administration and is in order for first reading.

2020-96 This is an award of bid for a replacement unmarked vehicle for the Police Department. The City solicited bids for a used, late model, low mileage sedan and received three proposals. The low bid was submitted by Yankee Ford Sales, South Portland for a 2019 Ford Taurus for $21,500. The City has had great success in recent year shopping the used vehicle market to save money while providing dependable vehicles for use by the department. This purchase is funded through the Cruiser Fee account, is supported by the Administration and is in order for first reading.

2020-97 This authorizes an expenditure of $15,088 by the Westbrook Recreation & Conservation Commission that competes the funding needed for the $263,600 renovation project at the Cornelia Warren 4-Season Rink at 58 Lincoln Street. This project was previously approved by the City Council, with the demolition and site preparation completed and construction schedule to begin in September. The source of the Rec & Cons funds is from Open Space/Recreation fees paid by developers as part of the subdivision approval process with the Planning Board. This entire project is funded with grants and donations, with no local property tax allocation necessary. The support of the Recreation & Conservation Commission, along with the other funding sources, is greatly appreciated. This expenditure authorization is supported by the Administration and is in order for first reading.

2020-98 This authorizes the purchase of a replacement recorder system for the public safety emergency and non-emergency communications system. The current system is ageing out and this is a planned replacement that is budgeted in the FY 20-21 Information Technology budget. This is both a replacement and a bid of an upgrade as the newer technology enables Dispatch to integrate this new system to other emergency notification systems. The purchase is being made through our public safety emergency communications vendor, Radio Communications Management, Inc of Portland. The equipment is a NexLog 740 Recorder System and the total cost of purchase and installation is $41,894.40. That includes first year service/support, with an annual fee of $3,217 per year thereafter. This purchase is supported by the Administration and is in order for first reading.

2020-99 This authorizes the acceptance of asset forfeiture funds for the Westbrook Police Department in the amount of $3,359.54 from the Federal Bureau of Investigation, in recognition of the substantial contributions made by the Westbrook Police Department to the investigation of a criminal case. This amount will be placed in the Department's Asset Forfeiture account. All assets obtained in this fashion must be used to supplement the resources available to the Department and not to supplant them. This acceptance of forfeited assets is supported by the Administration and is in order for first reading.

2020-100 This authorizes payment to Jatheon Technologies of Toronto, Canada in the amount of $5,999 for the annual email archive server maintenance. The email server purchase was approved by City Council last year by Order 2019-28 and allows the City to be compliant with Freedom of Access Act (FOAA) requests while the City evaluates the migration to another solution. This payment is supported by the Administration and is in order for first reading.

2020-101 This authorizes an award of bid for two 2021 Ford Explorer Police Interceptors to Rowe Ford of Westbrook, Maine for a total cost of $113,849. Rowe was not the lowest bidder but was within 2% of the lowest bid price. In accordance with the City's purchasing

policy, Rowe Ford should be awarded this bid, as they are a local vendor. These two Police cruisers were included in the FY 2020 Capital Improvement Plan. This award of bid is supported by the Administration and is in order for first reading.

WESTBROOK CITY COUNCIL
PUBLIC SAFETY COMMITTEE MEETING MINUTES
MONDAY JULY 27, 2020
WESTBROOK PERFORMING ARTS CENTER

CALL TO ORDER

Meeting called to order at 6:59pm by Public Safety Committee Chair David Morse

City Councilors Present: Claude Rwaganje (At-Large); Michael Shaughnessy (At-Large); David C. Morse (Ward 1); Victor Chau (Ward 2); Anna Turcotte (Ward 3, Vice President); Gary Rairdon (Ward 4, President);

City Councilors Absent: Elliot Storey (Ward 5)

Other City Officials Present: Jerre Bryant (City Administrator); Natalie Burns (City Solicitor); Harrison Deah (Director of General Assistance & Social Services); Melanie Fernald (Deputy Clerk); Stephen Fields (Assistant City Administrator/Director of Human Resources); Michael T. Foley (Mayor); Ashley Rand (Deputy Director Economic Development); Janine Roberts (Police Chief); Steve Goldberg (Police Captain); Sean Lally (Police Captain);

POLICE DEPARTMENT USE OF FORCE POLICY

Committee Chair Morse gave the floor to Mayor Foley, who introduced the Department's review of the Use of Force Policy. Mayor Foley handed floor to Chief Roberts who gave presentation on Use of Force.

Committee Chair Morse opened the floor for comments on the Police Department Use of Force Policy. The following individuals spoke: Councilor Rwaganje, Councilor Chau, Regina Phillips - Portland resident, Sue Salisbury - 134 Park Road, Harrison Deah – Westbrook employee, Unknown commenter, Mayor Foley, Councilor Shaughnessy, Committee Chair Morse, Vice President Turcotte

ADJOURNMENT

Motion to adjourn at 8:33pm.
Moved by Councilor Chau, seconded by Vice President Turcotte.
Motion carried by a show of hands. None opposed.

DRAFT

WESTBROOK CITY COUNCIL
SPECIAL CITY COUNCIL MEETING MINUTES
MONDAY JULY 27, 2020
WESTBROOK PERFORMING ARTS CENTER

READING THE CALL
Ms. Rand noted for the record that this Special City Council Meeting was called by Mayor Foley on July 23, 2020. Notice was sent to all City Councilors and was posted to the City's website.

CALL TO ORDER
Meeting called to order at 6:00pm by City Council President Gary Rairdon.

City Councilors Present: Claude Rwaganje (At-Large); Michael Shaughnessy (At-Large); David C. Morse (Ward 1); Victor Chau (Ward 2); Gary Rairdon (Ward 4, President);

City Councilors Absent: Anna A. Turcotte (Ward 3, Vice President); Elliot Storey (Ward 5)

Other City Officials Present: Rosemary Bebris (Library Director); Jerre Bryant (City Administrator); Natalie Burns (City Solicitor); Harrison Deah (Director of General Assistance & Social Services); Melanie Fernald (Deputy Clerk); Stephen Fields (Assistant City Administrator/Director of Human Resources); Michael T. Foley (Mayor); Jennie Franceschi (Director of Planning & Code Enforcement); Suzanne Knight (Finance Director); Ashley Rand (Deputy Director of Economic Development); Daniel Stevenson (Director of Economic Development)

PLEDGE OF ALLEGIANCE
President Rairdon led all present in the Pledge of Allegiance.

MINUTES
President Rairdon stated that unless any objections are received, the minutes from the following meetings would stand as presented: the Finance Committee Meeting & Regular City Council meeting held on July 6. No objections were received; minutes stand as presented.

MAYOR'S MESSAGE
Mayor Foley read his message into the record. The full text of the Mayor's Message is attached to these minutes.

STUDENT REPRESENTATIVE UPDATE
No Student Representatives were present.

PUBLIC COMMENT
President Rairdon opened the floor for the first public comment portion of the evening's meeting. The following individuals spoke:
none

UNFINISHED BUSINESS

1. **Order 2020-74. Authorizing a Utility Easement at 5 Bradley Drive.**
   Motion to remove from unfinished business, amend the order to reflect newly attached sketch plan and approve second and final reading of Order 2020-74.

DRAFT

Moved by Councilor Morse, seconded by Councilor Chau
President Rairdon opened the floor for comments on the motion to approve second and final reading.
The following individuals spoke: Mr. Bryant
Motion carried. Order 2020-74 adopted. (Vote 5-0-2)
Ayes: Rwaganje, Shaughnessy, Morse, Chau, Rairdon
Nays: None
Absent: Turcotte, Storey

ORDERS OF THE DAY (SECOND AND FINAL READING)

Included below are the City Council Orders which require second and final reading.

1. **Order 2020-76. Authorizing Reallocation of Proceeds of the City's 2015 General Obligation Bond for Cumberland Mills Signalization Project to Fund Other Capital Projects.**
   Motion to approve second and final reading of Order 2020-76.
   Moved by Councilor Shaughnessy, seconded by Councilor Chau.
   President Rairdon opened the floor for comments on the motion to approve second and final reading.
   No one spoke.
   Motion carried. Order 2020-76 adopted. (Votes 5-0-2)
   Ayes: Rwaganje, Shaughnessy, Morse, Chau, Rairdon
   Nays: None
   Absent: Turcotte, Storey

2. **Order 2020-77. Authorizing a Memorandum of Understanding Regarding Mechanic Street Parking Lot.**
   Motion to approve second and final reading of Order 2020-77.
   Moved by Councilor Shaughnessy, seconded by Councilor Chau.
   President Rairdon opened the floor for comments on the motion to approve second and final reading.
   No one spoke.
   Motion carried. Order 2020-77 adopted. (Votes 5-0-2)
   Ayes: Rwaganje, Shaughnessy, Morse, Chau, Rairdon
   Nays: None
   Absent: Turcotte, Storey

NEW BUSINESS

Included below are the Council actions on New Business, which includes business licenses requiring City Council approval, City Council Resolves and Orders receiving first and final reading, City Council Orders receiving the first of two required readings, and all items to be considered in Executive Session.

1. **Resolve 2020-22. Petitioning Probate Court for Joseph Walker Will Trustee Appointment**
   Motion to approve first and final reading of Resolve 2020-22.
   Moved by Morse, seconded by Councilor Chau.
   President Rairdon opened the floor for comments on the motion. The following individuals spoke:
   Mayor Foley, Councilor Morse, Councilor Rwaganje, President Rairdon
   Motion carried. Resolve 2020-22 adopted. (Vote 5-0-2)
   Ayes: Rwaganje, Shaughnessy, Morse, Chau, Rairdon
   Nays: None
   Absent: Turcotte, Storey

2. **Order 2020-85. Authorizing Westbrook Environmental Improvement Corporation (WEIC) Expenditure for Due Diligence Services at Mechanic Street Parking Lot**
   Motion to approve first and final reading of Order 2020-85.
   Moved by Councilor Chau, second by Councilor Rwaganje.
   President Rairdon opened the floor for comments on the motion. The following individuals spoke: President Rairdon
   Motion carried. Order 2020-85 adopted. (Votes 5-0-2)
   Ayes: Rwaganje, Shaughnessy, Morse, Chau, Rairdon
   Nays: None
   Absent: Turcotte, Storey

3. **Order 2020-86. Authorizing Community Policing Sub-Station Rent Payments**
   Motion to approve the first of two readings for Order 2020-86.
   Moved by Councilor Shaughnessy, seconded by Councilor Rwaganje.
   President Rairdon opened the floor for comments on the motion. The following individuals spoke: Mr. Bryant, President Rairdon, Councilor Shaughnessy, Mayor Foley
   Motion carried by a show of hands. None opposed.

4. **Order 2020-87. Authorizing Saco/Eisenhower Street Intersection MPI Agreement.**
   Motion to approve the first of two readings for Order 2020-87.
   Moved by Councilor Rwaganje, seconded by Councilor Morse.
   President Rairdon opened the floor for comments on the motion. The following individuals spoke: Mr. Bryant
   Motion carried by a show of hands. None opposed.

5. **Order 2020-88. Authorizing Eisenhower/Spring Street MDOT BPI Intersection Project Construction/Perpetual Easement Compensation.**
   Motion to approve the first of two readings for Order 2020-88.
   Moved by Councilor Chau, seconded by Councilor Morse.
   President Rairdon opened the floor for comments on the motion. No one spoke
   Motion carried by a show of hands. None opposed.

6. **Order 2020-89. Authorizing Second & Final Payment for Simulcast Transmitter/Receiver Site & Amending Annual Vendor List.**
   Motion to approve the first of two readings for Order 2020-89.
   Moved by Councilor Morse, seconded by Councilor Chau.
   President Rairdon opened the floor for comments on the motion. No one spoke
   Motion carried by a show of hands. None opposed.

7. **Order 2020-90. Authorizing a Utility Easement at 5 Bradley Drive (5 Bradley Drive Westbrook, LLC).**
   Motion to approve the first of two readings for Order 2020-90.
   Moved by Councilor Rwaganje, seconded by Councilor Morse.
   President Rairdon opened the floor for comments on the motion. No one spoke
   Motion carried by a show of hands. None opposed.

PUBLIC COMMENT

President Rairdon opened the floor for the second and final public comment portion of the evening's meeting. The following individuals spoke: President Rairdon; Councilor Rwaganje

REFERRALS
There were no referrals.

COMMITTEE REPORTS
There were no reports from City Council committees.

ADJOURNMENT
Motion to adjourn at 6:37pm.
Moved by Councilor Morse, seconded by Councilor Chau.
Motion carried by a show of hands. None opposed.

CITY OF WESTBROOK, MAINE

IN CITY COUNCIL

Date: July 6, 2020

Order: 2020-78

AMENDING LAND USE ORDINANCE REGARDING SIGN REGULATIONS

That the Westbrook City Council hereby amends the Westbrook Code of Ordinances Land Use Ordinance Section 404, *Sign Regulations*, as outlined in the attached exhibit.

First Reading: July 6, 2020 Second and Final Reading: August 3, 2020

Attest:

City Clerk Mayor

CITY OF WESTBROOK, MAINE

2 York Street, Westbrook, ME 04092

REQUEST FOR COUNCIL ACTION

*Requests are due to the City Clerk two Fridays prior to a Council meeting. If expenditure/acceptance of funds is involved, Finance Department approval is required **prior** to submission.*

PROPOSED TITLE: LUO Amendment - 404 Sign Regulations - Repeal and Replace

REQUESTED BY: Jennie Franceschi

DATE: 06/17/2020

SUMMARY:

See Attached Memo

BUDGET LINES AFFECTED (IF APPLICABLE):

NONE

Westbrook, Maine
PLANNING & CODE ENFORCEMENT

Planning & Code Enforcement
2 York Street
Westbrook, Maine 04092
Phone: 207-854-0638
Fax: 866-559-0642

MEMO

DATE: June 12, 2020

TO: Mayor, City Council
FROM: Jennie P. Franceschi, City Planner & Rebecca Spitella, Asst. Planner
Cc: City Administrator, City Clerk, City Solicitor

RE: Amendment to the Land Use Ordinance – Chapter IV Section 404 Sign Regulations

Attached: Proposed amendment for consideration from Planning Board Public Hearing of 5/5/2020

Executive Summary: The Planning Board provided the City Council the following recommendation: *7-0 Vote to Amend the LUO to per the attached documentation.* (Chapter IV Section 404 Sign Regulations)

Ordinance Description

The proposed amendment establishes standards for temporary noncommercial signage on public property and within the public rights-of-way.

Additionally, the amendment reorganizes Section 404 Sign Regulations to provide clarity on vague language, removes inconsistences between general provisions and individual district standards and provide consistent layout and regulation between districts.

Therefore, due to the extensive reorganization of the section, the document before is a repeal and replace, however we have provided an edited version for you to be able to see what was done to the document.

Ordinance History

February 3, 2020 – Referral from City Council
March 3, 2020 – Planning Board Workshop
May 5, 2020 – Planning Board Public Hearing
July 6, 2020 - City Council 1st Reading

Staff Comments

City Council made a referral to the Planning Board to review the City Ordinance regarding temporary signage. Currently, regulations for temporary signs is limited and temporary signage on public property is not clearly defined or addressed. Through review of State statute and the Ordinances of neighboring municipalities, Staff has drafted a new Ordinance within the general provisions of Section 404 titled 'Temporary Signage on Public Property and Within a Public Right-of-Way'. Further description of this section is provided later in this memo. Regulations on temporary signage not located on private property was expanded within each clustered district.

During the process of drafting the new temporary sign Ordinance, it became clear the entire existing Sign Ordinance is disorganized and, at points, overly vague or contradictory making it difficult to interpret. This can create confusion for both applicants and Staff in ensuring all new signs are in compliance with regulations and that regulations are being enforced in a consistent manner. Therefore, Staff is proposing a complete rewrite of Section 404 to reorganize the Ordinance, relocate a General Provisions section at the onset of Section 404, where now they are scattered throughout Section 404 and provide a consistent terminology and layouts of Sections 404.4 – 404.6. The proposed amendment is a complete repeal and replace of Section 404. For reviewing purposes, Staff is providing Council with two documents; The first document is a clean copy of the proposed new Ordinance. The second document shows the amendment in its entirety with strikethroughs and new language to view the adjustments to the current ordinance. All NEW language is shown in **RED** and all REMOVED language is ~~strikethrough~~, leaving **BLACK** language as current wording. The changes may appear substantive however most of the strikethroughs are moving the language to consolidated section, which then that moved language appears in **RED**.

Notwithstanding the new regulations for temporary signage on public property/within the public right-of-way, the bulk of the rewrite is administrative in nature (i.e. reorganization, removing duplicative language, typos and providing clarity on vague standard language).

Below is a detailed summary of the changes proposed. Amendments that are new regulations or altering the standards of a district are highlighted in yellow for the Council's consideration.

404.1 – Purpose – Move purpose statement under General Provision to the beginning of the section and update purpose statement.

404.2 – Application Process – Codifying our process and placing of criteria in the appropriate section.

A. Language was moved from the City Center District section to the beginning of the document to clarify the process.

B. Removed language that was inconsistent with current procedures on sign area computation.

C. Provision added that night renderings can be requested for proposed illuminated signs at the request of Staff during the review process, which is a current practice, as needed.

404.3 – General Provisions

A. Relocated standard from City Center District (404.3.1.1.D.) to General Provisions as this standard applies to all signs.

B-D. Relocated from 404.4 – 404.6. These standards apply to all signs in the City. The amendment relocates these regulations from the end of the Sign section, where they can be missed by applicants who are reading the Ordinance, to the General Provisions Section. No changes in standard were made, other than retitling previous section 404.4 "Light Source Regulated" to "Illumination" to be consistent with wording throughout the section.

E. New Section. The intent of this section is to regulate noncommercial signage, including political or campaign signage, on public property. Per state law, commercial signage is prohibited from public property as it is considered off-premise signage (standard G.1). The

intent of the Ordinance is to allow temporary signage that does not impede pedestrian or vehicular safety or pose a threat to public or private property due to staking of signs or damage of falling signs that are made from heavy materials. This is achieved by limiting the sign size to 2'x3' in size (state law permits noncommercial signage to be up to 8' x 4' in size), prohibiting illumination due to the proximity of signs to/within public rights-of-way, and restricting signs from specific parks, facilities and intersections that are areas of concern for public safety or welfare.

Standards 1, 6 and 9 are State statue and cannot be altered.

F. Banners within the public right-of-way are currently regulated within the City Center District 404.3.1.3.H (Temporary Community Event Signs) and Section 404.7 (Temporary Community Event Signs). Although these are titled the same, one is referring to banner signs that are hung on light poles and the other is regulating banners across the public right-of-way. The proposed amendment relocates and consolidates these standards to General Provisions section as well as amends the reviewing authority for banners across a public way to the Director of Public Services instead of the Code Enforcement Officer. Banners across the public way must meet DOT standards and are currently subject to the approval of the Director of Public Services. Some revisions to the language were made for clarity, however the standards were not altered.

G. Nonconforming Signs. Nonconformance and discontinuance is addressed within the Residential Districts, City Center District and as a general standard (404.8). This amendment consolidates those existing standards of nonconformance and now applies them uniformly across all districts.

Currently, nonconforming signs in the Highway Services, Gateway Commercial, Industrial Park, Prides Corner Smart Growth Area and Manufacturing Districts are not afforded the ability to alter or relocate their nonconforming signs without bringing the sign into full compliance with current standards. Signs in the rest of the City may alter or relocate their signs, provided they are reduced in size a minimum of 25%, lessoning the nonconformity. As this provision is currently provided to the majority of the City, Staff felt it was overly restricting to prohibit this allowance to signs in commercial districts and have included it in this amendment.
Additionally, provisions for continuance and discontinuance were added to be consistence with the nonconformance provisions of Section 203. The discontinuance provision as written currently exists only within the City Center District section. The proposed amendment would apply this language equally to all signs throughout the City, which is consistent with our Nonconforming Use provisions.

H. Variance. A prohibition on variances from the sign ordinance exists under Section 404.8. The amendment places those provisions into separated Nonconformance and Variance provisions for ease of reference.

404.4 – Residential Districts

Amendments within this section were made for the following reasons:

1. Revision to section title for clarity

2. Reorganization of section by General, Sign Type, Illumination and Material
3. Reorganized sign type as Ground Mounted, Temporary and Building Mounded to be consistent with other sections within the Ordinance.
4. Removed 'occupant and street number' as this is redundant. Commercial signage would be regulated by the building mounted signage regulation and residential occupant/street number signs are noncommercial signage and therefore not regulated.
5. Added clarification to temporary subdivision signs that the subdivision must be an approved subdivision prior to sign installation. The Ordinance is clear that the intent of this provision is to allow signs during the construction of the subdivision. Added a max sign square footage on a permanent sign that is consistent with the Business sign in this district size of 16 sq. ft.
6. Removal of size restriction for nonconforming and conditional uses (current 404.2.D). Legally Nonconforming and Conditional Use operations are permitted and should be afforded the same signage as all other legally existing buildings.
7. Added clarity that temporary signs do not require a permit from CEO
8. Retitling Business Sign to "Building Mounted" as the district does not permit freestanding signs other than what was previously outlined. General reorganization of section
    a. Language to Sign Allowance 3.a moved from previous H.(1).b with slight wording revision for clarity. No changes were made to the standard.
    b. Message Boards – New Language. Message Boards are currently permitted within residential districts and are held to the standards outlined in Section 404.G (Signs in Highway Services District, Gateway Commercial District, Industrial Park Zoning District, Manufacturing District and Prides Corner SGA). The proposed amendment added the City-Wide message board standards in this section rather than having to reference another section of the Ordinance. No changes were made to the standards. Clarity has been provided for the intent of the message board is to maintain an unlit background with lettering or text to prevent glare in the public rights-of-way.
9. Remove language identifying business signs as temporary (existing 404.2.H.(1).a). The current wording of this provisions is confusing and unclear. Differentiation is not provided as to which signs are temporary vs permanent therefore this section was removed.
10. Previous H.(1).b. Business Signs; Stationary - Provision is separated to differentiate sign and lighting standards in the proposed sections 'Sign Allowance' and 'Illumination'
11. Nonconforming sign provisions removed – relocated to the new General Provisions section.
12. Illumination – language moved from previous H.(1).b. No changes were made to these standards.
13. Materials – New Section. Standards are consistent with provisions of other districts

404.5 – Signs in Highway Services District, Gateway Commercial District, Industrial Park Zoning District, Manufacturing District and Prides Corner Smart Growth Area

Amendments within this section are as follows:

1. Reorganization of section for clarity, readability and sign type classification.
2. Changeable Message Boards – Changeable message boards are currently permitted within these districts under the Illumination provision (existing 404.3.E). The proposed amendment relocates the message board standards from the Illumination provision to be included as a permitted sign type. No changes to the standards were made. Clarity was provided that the intent of the message board is to maintain an unlit background with lettering or text to prevent glare in the public rights-of-way.
3. Revising "Informational" signs to "Directional" signs to remain consistent throughout Ordinance.
4. Relocated "Time and Temp Sign" to be included within the header of Sign Type
5. New Sections – Awning Signs and Temporary Signs

a. Awning signs – this type of signage is not expressly included within the commercial districts and is therefore regulated as a general "building mounted" sign. The standards proposed were modeled from the standards outlined in the City Center District.
b. Temporary signs are not currently addressed within the Commercial Districts. The standards proposed are modeled from the standards outlined in the City Center District

6. New Standard – Prohibited materials clarified to be consistent with materials permitted in other districts as well as the general standards to address public safety (i.e. signs intended to distract motoring vehicles).

404.6 – Signs in the City Center District

This section of the Sign Ordinance is particularly disorganized. Amendments within this section include the following:

1. Preambles should not be in ordinance and is replaced with the purpose statement.
2. Reorganization and renumbering of section to consolidate standards to General Provisions, Sign Types, Illumination and Materials sections, in the order that is consistent with the provisions of the other districts
3. Section 404.3.1.1.B Traffic safety and Illumination – section separated. Illumination standards moved to Illumination section. Statement on district setbacks do not apply to signs removed as there are no setbacks in the CCD, so this provision is unnecessary.
4. Sign Permits (404.3.1.1.D – E) – Provision relocated to 404.1 General Provisions as this process is applicable to all sign applications in the City, with the exception of the insurance requirement which is specific to signs that are only permitted in the CCD.
5. Sections 404.3.1.1.G – H are standards that pertain to building mounted signage. Relocated to proposed 404.6.C.1
6. Section 404.3.1.1.I are standards related to temporary signage. Provision relocated to proposed 404.6.C.11, Sign Types Allowed)
7. Section 404.3.1.1.J - K is stricken as nonconforming sign discontinuance and alterations are addressed in the General Provisions, 404.1.
8. Section 404.3.1.1.L – Definitions. Staff is recommending to relocate definitions for 'Commercial Message', 'Nonconforming Sign' and 'Signs' to Section 201, Definitions, and removing 'Animated Sign', 'Temporary Community Events', 'Public Way', 'Visible' and 'Window Sign' as these terms are either not utilized within the Ordinance or are vernacular in nature and are not necessary in the ordinance.
9. 404.3.1.2 – Illumination. Illumination is addressed throughout the City Center District Standards. The proposed consolidates all Illumination Standards with slight rewording to eliminate duplicative language. No changes are proposed to the lighting standards from what they currently are. At the direction of the Code Enforcement Officer, the proposed amendment also broadens the current requirements to Nationally Registered Testing Laboratory listed rather than specifying Underwriters Laboratory.
10. 404.3.1.3 – Sign Types Allowed.
    a. Building Mounted – relocation of standards from general section (as stated in comment 4 above.)
    b. Message Board - Clarity was provided that the intent of the message board is to maintain an unlit background with lettering or text to prevent glare in the public rights-of-way.
    c. Temporary Community Event Signs – Provision moved to General Provision (proposed 404.1.H.1, Banners within the Public Right-of-Way)
    d. Temporary Signs located on Private Property – relocation of standards from general section (as stated in comment 5 above)
11. Sign Materials – Reorganized and clarified materials to be of solid construction.

Sections 404.5 – 404.8

Relocated to General Provisions, proposed 401.D, E, F, I and J, respectively, as described above in this memo.

404 Sign Regulations

404.1 **Purpose:** A sign or advertising device of any nature may not be erected on or affixed to any building except as specifically permitted by Section 404.

404.2 **Application Process.**

A. **Permit Required.** Except as otherwise provided herein, a sign or advertising devise of any nature may not be erected on a lot or affixed to the exterior of any building or structure without first obtaining a sign permit from the Code Enforcement Officer.

B. **Computation of Area**. The area of a sign is determined by connecting the exterior points of the signboard or display elements, whichever is larger. It must include any open space between display elements. Display elements include letters, words, trademarks, medallions, symbols, and other devices intended to advertise or indicate the name of the premises, products or services available.(Ord. 8/21/06)

C. **Submission Requirements**. All permit applications shall include:

1. A color drawing showing all sign dimensions and building dimensions as necessary, types of materials, wording, colors to be used, along with any proposed illumination and a visual depiction of where the sign would be located on the site.
2. Day and night renderings for illuminated signs may be required.
3. A fee shall be assessed for the review and administration of all sign permits as set forth in the Master Fee Schedule.

D. **Permit Decision.** Once the CEO is in receipt of a complete application, the CEO shall approve, approved with conditions, or deny the application.

1. The applicant can proceed with sign installation once the Code Enforcement Officer has issued the sign permit.
2. Applicant to contact the Code Enforcement Office once sign is install for verification by CEO that sign was installed per approved plans.

404.3 **General Provisions**.

A. **Location/Setback.** A sign requiring a sign permit shall be set back a minimum of ½ the minimum yard depth of the underlying zoning district.

B. **Illumination**. In all districts, a lighting fixture that directly or indirectly illuminates a sign, must be designed so that the light source itself is shielded from view and does not shine directly into the right-of-way or onto adjacent properties. This does not apply to signs illuminated by neon or illuminated tube type signs.

C. **Highway Guide Signs**. The City of Westbrook or the Westbrook/Gorham Community Chamber of Commerce may erect a guide sign on each entrance to Westbrook. Each sign must be placed so as to be in view only from Routes 302, 25, 22, Spring Street, and Stroudwater Street. Maximum size shall be ten feet by twenty feet (10” x 20”), with directions focused on general areas rather than as advertisement for specific businesses.

D. **Consolidated Service Club Sign**. Service clubs in the city may have a consolidated sign

in any district on each of Routes 25, 302, 22, Spring Street and Stroudwater Street entering the city. Each sign must meet the following requirements:

1. Size. May not exceed a height of ten (10) feet or a width of ten (10) feet. The sign area for each individual club may not exceed ten (10) square feet.

2. Content. May contain only the name, symbol, meeting time, and meeting place of each service club.

3. Illumination. May not be internally illuminated.

E. **Temporary Signs on Public Property or within the Public Right-of-Way.** Temporary signs shall be allowed on public property or within the public right-of-way, with no permit required, for a period of no more than twelve (12) weeks in a calendar year provided the following criteria are met:

1. Only noncommercial signage is permitted on public property or within the public right of way. Signs bearing a commercial message are prohibited.

2. A temporary sign may not exceed two feet by three feet (2'x3') in size.

3. A sign under this paragraph must include or be marked with the name and address of the individual, entity or organization that placed the sign within the public right-of-way and the date the sign was erected within the public right-of-way.

4. A temporary sign shall not result in a sight, traffic, health or welfare hazard to pedestrian or vehicular traffic due to placement, or manner of construction or display.

5. Any damage to public property or utilities that is caused by a temporary sign, including but not limited to sign installation, is the responsibility of the sign owner. The Director of Public Services shall determine whether damage has occurred and the cost of repair. The sign owner will then be notified in writing and payment is required within 30-days of the date of notice.

6. A temporary sign may not be placed within 30-feet of another temporary sign bearing the same or substantially the same message.

7. Illumination of a temporary sign is prohibited

8. For the purpose of temporary signs located within the Shoreland Zone, signs shall be considered to be a structure and must comply with all Shoreland Standards, including but not limited to, setbacks and permitting. No signs are permitted below the normal high-water line of a water body or within a wetland.

9. Signs shall not be erected or maintained on the following:
    a. A traffic control sign or device
    b. A public utility pole or fixture
    c. A rotary traffic island
    d. A tree on public property or within a public right-of-way

e. A control-of-access right of way area
f. A median less than six (6) feet wide

10. Temporary Signs are prohibited from being affixed to the grounds of the following locations:
    a. Saccarappa Park, Warren Memorial Sculpture Garden, Riverbank Park, Westbrook Commons.
    b. Temporary signs located on the Westbrook Community Center parcel (010-029B) unless such signs are set back a minimum of two hundred fifty (250) feet from Bridge Street.
    c. Public school grounds.
    d. Cemeteries.

11. Removal Process: Removal of unlawful signs shall be conducted in accordance with Maine State Statutes Title 23 Part 1Chapter 21 Section 1917.

F. **Banner Signs in the Public Right-of-Way**.

1. The Director of Public Services may permit a system of decorative banners or banners identifying community events open to the public to be placed by a business group or civic group on light poles on public property along Main Street, William Clark Drive, or Bridge Street. Signage shall not be deemed permanent.

2. The Director of Public Services may permit a person or organization to install a banner sign across a public right-of-way under the following conditions:

    a. Citywide Interest. The purpose of the banner must be to announce a function of citywide interest, including church events, concerts, fund-raisers or similar activities.

    b. State and Local Law. The installation of the banner must meet all the requirements of state and local law. The person requesting the installation of the banner must provide a sketch showing the dimensions, method of installation, materials, and text of the banner. The Director of Public Services shall establish the dates of installation and removal.

    c. See Chapter 29 Art. VII for Process on Banner Signs in the Public Right of Way.

G. **Nonconforming Signs**. Nonconforming signs shall be subject to the following provisions

1. **Continuance.** Nonconforming signs may continue to exist, so long as the use remains the same, the business remains open to the public, and if the signs are maintained in a safe, neat and clean conditions.

2. **Discontinuance.** Any sign, along with its supports, which no longer advertises an existing business, primary product sold, activity being conducted, or public notice, shall be taken down and removed by the owner, agent or person having beneficial use of the building or premises upon which such sign may be found within twelve (12) months after the activity has ceased.

3. **Alteration or Relocation.** The Code Enforcement Officer may approve the alteration or relocation of a lawfully nonconforming sign so long as it is reduced in size by at least twenty-five percent (25%) of the original sign size. This could be achieved through eliminating signs or reducing the overall size of the sign. Where there are additional alterations or relocations beyond that there must be an additional reduction in size of at least twenty-five percent (25%) until such time as the sign size is no longer non-conforming. Alteration could include a change in illumination, or of any component of the sign other than for basic maintenance to ensure a safe, neat and clean condition

   a. The repair or replacement of a panel within a nonconforming sign is permitted without reduction provided no other components of the sign, including but not limited to sign frame, supports and illumination are altered or relocated.

   b. The Code Enforcement Officer may permit the repair of a nonconforming sign without reduction provided the repair is to the benefit of public health and safety, or the damage was caused by a weather or other third-party event that is no fault of the property owner.

4. Any entity proposing a development requiring Site Plan Review shall, as a condition of any approval of such development proposal, be required to bring any signs into conformance with the provisions of this ordinance, except as follows:

   a. Individual lawfully nonconforming signs which are within developments seeking amended Site Plan Review approval and which will not be altered as part of the proposed project are not required to be brought into conformance with this ordinance unless the development proposal involves at least a twenty percent (20%) increase in the total on-site building footprint or a change in use of the property. New and altered signs in such developments shall conform to this Ordinance.

H. **Variance.** The granting of a variance from the Sign Ordinance provisions is prohibited.

404.4 **Signs in Residential Growth Area 1, Residential Growth Area 2, Residential Growth Area 3 and Rural Districts**. The following provisions apply to signs in residential zoning districts:

A. General
   1. All signs or advertising devices must be permanently affixed to the real estate. They may only identify the occupant of the premises or advertise the article or services available on the premises on which they are situated.

B. Sign Types
   1. Ground Mounted Signs
      a. Bulletin Board or Identification Sign.
         i. One (1) bulletin board or identification sign for a permitted non-residential building or use, containing not more than six (6) square feet of signboard area.
         ii. For churches, schools, and public institutions, two (2) bulletin boards or identification signs are permitted for each building. Each sign may contain not more than ten (10) square feet of signboard area.

iii. A bulletin board or informational sign must be set back at least one-half (1/2) of the required front yard depth.

b. Rental Area. On the premises of an apartment building or rental housing area, there may be one (1) identifying sign containing not more than six (6) square feet of signboard area.

c. Subdivision Sign.

i. Temporary. A temporary sign is allowed without a permit to advertise an approved subdivision site while construction is under way. The sign may not contain more than twelve (12) square feet of signboard area.

ii. Permanent. A permanent sign is permitted to identify a neighborhood that has been created as the result of a subdivision approved by the Planning Board. The sign may not be placed in the right-of-way, nor block safe sight distances along a road. Total area of sign shall not exceed 16 square feet.

2. Temporary Signs not located on Public Property or within the Public Right-of-Way

a. Real Estate Signs. One (1) "For Sale," "For Rent," or "For Lease" sign is allowed without a permit on the property, containing not more than six (6) square feet of signboard area and advertising only the premises on which the sign is located. Where the property fronts on two streets, one (1) sign is permitted facing each street.

b. Construction Sign. On the premises of a building under construction or renovation, one (1) sign not exceeding five (5) square feet of signboard area is allowed without a permit per contractor, subcontractor, or architect actually employed on the premises. Total area of all signs shall not exceed thirty-two (32) square feet.

3. Building Mounted Signs.

a. Sign Allowance

i. On the premises of a business which is legally operating in a residential zoning district, other than those described in Section 404.4.A, there may be one (1) sign advertising that business containing an area of not more than sixteen (16) square feet.

ii. All signs or advertising devices must be permanently affixed to the structure in which the business is located. Unless otherwise permitted, signs shall not contain any visible moving or movable parts.

4. Changeable Message Board. Changeable message board signs are allowed and are calculated within the allowable sign area for the business. Changeable message boards may change not more than once every 5-minutes and shall maintain an unlit background with only the illumination of the lettering or text.

C. **Illumination.** The lighting of neon or other illuminated tube-type signs or advertising device is not allowed in Residential Growth Area 1, Residential Growth Area 2, Residential Growth Area 3 and Rural districts.

D. **Materials.**
1. Signs shall be constructed of sturdy material.
2. No sign shall be constructed of banners, ribbons, spinners, feather flags or other similar devices that represent a visual distraction to the motoring public.

404.5 **Signs in Highway Services District, Gateway Commercial District, Industrial Park Zoning District, Manufacturing District and Prides Corner Smart Growth Area**. The following provisions apply to signs in the Highway Services District, Gateway Commercial District, Industrial Park District, Manufacturing District and Prides Corner Smart Growth Area: (Ord. of 03-07-05; 05-15-06; 06-22-09)

A. **General.**
1. All signs or advertising devices must be permanently affixed to the real estate. They may only identify the occupant of the premises or advertise the article or services available on the premises on which they are situated.

2. Number of Signs. Maximum Height. On each lot, not more than two (2) signs are permitted affixed to each exterior face of a building fronting on a public street or parking lot for each occupant. The topmost element of any sign may not be higher than ten (10) feet above the cornice line of the building. (Ord. of 6-22-09)

3. Overhanging Signs. Signs may not overhang the public right-of-way.

B. **Total Sign Allowance**

1. **Highway Services and Gateway Commercial Districts.**
   a. The total area of all signs for properties located in the Highway Services and ~~the~~ Gateway Commercial Districts that are forty thousand (40,000) square feet or less in land area shall not exceed five hundred (500) square feet.

   b. The total area of all signs ~~and~~ for properties located in the Highway Services and Gateway Commercial Districts that are ~~of~~ more than forty thousand (40,000) square feet of land area shall not exceed five hundred (500) square feet for the first 40,000 square feet of land area plus one hundred (100) square feet for each additional forty thousand (40,000) square feet of land area.

2. **Industrial Park District.** The total area of all signs for ~~a~~ properties in the Industrial Park District shall not exceed three hundred (300) square feet.

3. **Manufacturing District and Prides Corner Smart Growth Area.** The total area of all signs for properties located in the Manufacturing District and Prides Corner Smart Growth Area shall not exceed two hundred and fifty (250) square feet. (Ord. 01-26-06; 05-15-06; 6-22-09; 11-19-12)

C. Sign Types Allowed

1. Building Mounted Signs
   a. The total area of all signs permitted on the face of a building fronting on a public street or parking lot may not exceed one hundred (100) square feet for each twenty-five (25) feet of building frontage; except that in the Industrial Park District, the total area may not exceed two hundred (200) square feet.

2. Ground Mounted Signs.
   a. Sign Allowance. Where buildings are set back at least forty (40) feet, one (1) free-standing sign may be erected within the open space fronting upon a public street. The topmost element of a free-standing sign may be no more than twenty- five (25) feet above the average level of the ground between the supports of the sign. The sign must not obstruct the view of oncoming pedestrian or motor vehicle traffic.

      i. Divided Building. Where a building is divided by partitions and is occupied by separate entities, and where the building is constructed so that part of it is located within forty (40) feet of a public way and one or more of the entities within is entirely located at least forty (40) feet back from that way, there may be one (1) free-standing sign within the open space fronting upon the way. Only those entities located at least forty (40) feet back may utilize space on this sign.

   b. Computation of Sign Area. A free-standing sign may have an area of not more than one hundred (100) square feet. Any exterior linear dimension of a free-standing sign may not exceed sixteen (16) feet. (Ord. 05-15-06; 08-21-06; 6-22-09)

3. Changeable Message Boards.
   a. Changeable message board signs are permitted provided they are a permanent component of the sign and are calculated within the allowable sign area for the structure. Messages shall change at intervals of no more than once every five (5) minutes. Changeable message boards shall maintain an unlit background with only the illumination of the lettering or text. The total size of a changeable message board area shall not exceed sixty (60) square feet.

4. Directional Signs. Directional signs no larger than four (4) square feet, and containing no advertising are permitted on private property to direct traffic flow, indicate parking space, or provide other essential information to guide vehicular or pedestrian traffic flow with respect to that property.

5. Time and Temperature Signs. Time and temperature signs are permitted and must be included in the total square footage allotment for the structure.

6. Awning signs.
   a. Awning signs are permitted and are calculated within the allowable sign area for building mounted signage.
   b. Awnings may not be internally illuminated but may include lighting located beneath the awning directed downward for the purpose of illuminating the building entrance only.
   c. Awnings are allowed no lower than nine (9) feet above the average grade of the ground beneath it

d. Awning signs may include the street address and/or business name only.
   i. Such information shall be no more than twelve (12) inches in height and shall be placed on the front flap of the awning.

7. Temporary Signs not located on Public Property or within the Public Right of Way. The following signs are allowed on a temporary basis as follows and, unless otherwise stated, shall be securely affixed to the ground during the time allowed.

   a. Real Estate Signs. One real estate sign of no more than sixteen (16) square feet is allowed without a permit per lot proposed for lease, sale, or rent. The subject sign must be placed on the lot proposed for lease, sale, or rent. Such sign must be moved within two (2) weeks after the transaction. Such sign may be freestanding or building mounted.

   b. New Business Sign. One (1) sign is permitted advertising the opening of a new business. Such sign shall be of no more than fifteen (15) square feet and shall not remain on the premises more than thirty (30) days. Such sign shall be building mounted.

   c. Construction Signs. One (1) sign relating to construction projects for new or renovated buildings is allowed without a permit. Such sign shall be no more than thirty-two (32) square feet and may include the name of multiple contractors. Such sign shall be removed one (1) week after issuance of the Certificate of Occupancy. Such sign may be freestanding.

D. Illumination. Illuminated signs are permitted but they may not be intermittently illuminated or animated, with the exception of changeable message board signs which must comply with the standards as stated in this section.

E. Prohibited Materials. Signs shall be constructed of sturdy material. No sign shall be constructed of banners, ribbons, spinners, feather flags or other similar devices that represent a visual distraction to the motoring public.

404.6 Signs in the City Center District. The following provisions apply to signs in the City Center District: (Ord. of 6-1-09; 6-22-09; 4-5-10)

A. **Purpose.** The purpose of regulating signs is to promote and protect the public health, safety, and welfare by regulating existing and proposed outdoor advertising, outdoor advertising signs, and outdoor signs of all types; to protect property values; enhance and protect the physical appearance of the community; preserve the scenic and natural beauty, and provide a more enjoyable and pleasing community; to reduce sign or advertising distractions and obstructions that may contribute to traffic accidents; reduce hazards that may be caused by signs overhanging or projecting over public right of way; provide more open space, and curb the deterioration of natural beauty and the community environment.

B. **General.**

1. Traffic safety
   a. No sign, whether new or existing, shall be permitted that causes a visual obstruction or a traffic, health or welfare hazard or results in a nuisance due to illumination,

placement, or manner of construction or display.

b. No sign, except traditional barber poles for licensed and operating barber shops, shall have visible moving parts, blinking, moving or glaring illumination, or any part consisting of pennants, ribbons, streamers, spinners, feather flags or other similar devices that represent a visual distraction to the motoring public.

2. Business Signs. Business signs are allowed and shall be constructed, installed and maintained so as to ensure public safety. Such signs shall be clearly incidental, customary to, and commonly associated with and in the same site as the building or establishment to which it refers and shall be limited in subject matter to name, design, picture or trademark of the establishment. It shall not include any general commercial advertising materials unrelated to a principal business within the building. Signs not directly related to the business shall be prohibited. All such signs shall be appropriate in scale and appearance. Business signs on adjacent buildings located on the same parcel shall be of compatible design and character. Sign types and placement are further described herein.

3. Insurance. For any sign proposed to be placed on (sandwich board sign only) or that shall extend into (blade and/or awning only) the public right-of-way a permit is required on an annual basis and shall be accompanied by proof of general liability insurance coverage in the amount of $400,000.00 or any higher limit of liability imposed by the Maine Tort Claims Act in order to protect the City of Westbrook from any and all liability for personal or property damage to the public by reason of the erection and maintenance of such sign on and into the public right- of-way and shall maintain such insurance as long as such sign exists on and into the public right-of-way. The City shall be named as an additional insured on such insurance policy.

4. Sign Area Computation. Signs shall be measured from the outermost part of the sign, but not to include wall supports. Sign area includes borders or framing not required to affix a sign to a building. Sign area does not include the base for a ground mounted monument sign or the supportive pole(s) of a pylon sign. A sign with a double signboard or display area shall be construed to be one sign for the purpose of this Ordinance.

C. Sign Types Allowed.

1. Building Mounted. Building mounted signs include those that are painted or flush-mounted directly on an exterior building façade. Backlit characters and internally lit characters are considered flush mounted for the purpose of this Ordinance.

a. Signage Limitations
   i. The total area of all building mounted signs may not exceed five percent (5%) of the exterior wall facing a public way or parking lot on which the sign(s) is to be placed.
   ii. On any exterior wall facing a public way or parking lot, one (1) sign is permitted per individually owned and operated business within the building based on the sign area allowed per this subsection.
   iii. No sign shall extend above the roofline or parapet of the building on which it is placed.

b. Identification Sign.
   i. All buildings are required to display one (1) street number sign per exterior face of building fronting on a public way or parking lot.
   ii. Such sign may be no more than one and one-half (1.5) square feet in size, and it
   iii. must be located on the first-floor façade area of a building or on a sign.
   iv. Such sign shall not count toward the overall sign allowance.

2. Ground Mounted Signs. Sign area for ground mounted signs shall be no more than eighteen (18) square feet including all tenant signage.

   a. Monument Signs. Ground mounted monument signs are signs mounted to the ground by a solid (opaque) base structure made of wood (painted or varnished and weather treated), brick, or stone. Such sign shall be no taller than six (6) feet including the base.

   b. Pylon Signs. Pylon signs are signs mounted to the ground by poles made of materials consistent with this section. Such sign shall be no taller than nine (9) feet including the base.

3. Blade. Blade signs are attached directly to the building and extend perpendicular from the building wall
   a. Blade signs may be no more than fifty (50) square feet in size,
   b. Shall be placed no lower than ten (10) feet above the average grade beneath the sign, and
   c. Shall be no higher than twenty (20) feet above the average grade beneath the sign.
   d. Blade signs shall extend no further into a right of way than the lessor of four (4) feet or the backside of the curb abutting a public street.
   e. Blade signs may be permitted every twenty-five (25) feet of linear frontage on a freestanding building.

4. Changeable Message Board. A changeable message board sign is a sign attached to and associated with a freestanding (ground mounted or pylon) sign.
   a. Changeable Message board signs are permitted where freestanding signs area permitted and are calculated within the allowable sign area for the proposed freestanding sign.
   b. Such signs shall be no taller than twelve (12) inches including framing and shall include no more than two (2) lines of text.
   c. Such sign may include a changeable message but the message may not change more than once every five (5) minutes.
   d. The time and temperature may be posted and are part of the maximum allowable sign area of the message board.
   e. The changeable message board shall maintain an unlit background with only the illumination of lettering or text permitted.

5. Sandwich Board Signs.
   a. One (1) small A-frame sandwich board sign is allowed per twenty-five (25) feet of linear building frontage on Main Street or Bridge Street.
   b. Such signs shall not count toward the number of signs allowed per exterior face of

building.

c. Such signs are allowed when there is at least four (4) feet of clear travel space on a public sidewalk.
d. Sandwich board signs may be no more than eight (8) square feet in size and shall not extend into the four (4) feet of clear travel space.
e. Such signs may have writing on both sides,
f. May not be illuminated,
g. Shall have no moving parts,
h. Must be placed adjacent to the business which it supports, and
i. Shall not block pedestrian movement along a sidewalk or vehicular visibility.
j. Such signs shall face on-coming sidewalk traffic and not the street.
k. In the event that these provisions are violated or in the event of inclement weather, the Code Enforcement Officer may have such signs removed from the public way.
l. Sandwich board signs shall be temporary in nature and shall advertise temporary events.

6. Entry Point Tenant Listing Sign. One (1) small tenant listing sign is allowed per individual building and may list multiple tenants. Such sign may be no more than one and a half (1.5) square feet.

7. Directional Signs.
   a. Such signs may be freestanding or building mounted and shall not count toward the number of signs allowed per exterior face of building.
   b. Directional signs shall contain no business advertising and are permitted on private property in order to direct traffic flow, indicate the location of parking, or provide other essential information necessary to guide vehicular or pedestrian traffic flow within the private property.
   c. Such signs shall be no larger than two (2) square feet. Tenant listing signs shall not be considered directional signs.

8. Window Signs.
   a. Window signs shall be permitted on the first or ground floor only.
   b. In no event shall window signs cover more than twenty-five (25) percent of the area of any individually framed window.
   c. Window signs shall not be included in the sign area when calculating the total area of all building mounted signs.

9. Awning.
   a. Awnings may not be internally illuminated but may include lighting located beneath the awning directed downward for the purpose of illuminating the building entrance only Awnings are allowed no lower than nine (9) feet above the average grade of the public sidewalk beneath it, and
   b. Shall not extend more than four (4) feet into a public right-of-way, and
   c. Shall not extend into the curb abutting a public street.
   d. Awnings may include the street address and/or business name only.
   e. Such information shall be no more than twelve (12) inches in height and shall be placed on the front flap of the awning.
   f. In addition to these standards, awnings located within the Village Review Overlay Zone shall conform to the standards as outlined in Section 403, Village Review Overlay Zone. (Ord. 4-5-10)

10. Open Flag.
    a. A standard flag, no larger than 3'x5' in size suspended from a pole that is attached to a structure indicating that an establishment is "open for business".
    b. An Open Flag may not impede pedestrian travel within the public right-of-way.
    c. One (1) open flag is permitted per individually owned and operating business within a building.
    d. Open Flags are allowed every twenty-five (25) feet of linear frontage on a freestanding building.

11. Temporary Signs not located on Public Property or within the Public Right of Way. The following signs are allowed on a temporary basis as follows and, unless otherwise stated, shall be securely affixed to the ground during the time allowed.

    a. Real Estate Signs. One real estate sign of no more than eight (8) square feet is permitted without a permit per lot proposed for lease, sale, or rent. The subject sign must be placed on the lot proposed for lease, sale, or rent. Such sign must be moved within two (2) weeks after the transaction. Such sign may be freestanding or building mounted.

    b. New Business Sign. One (1) sign is permitted advertising the opening of a new business. Such sign shall be of no more than fifteen (15) square feet and shall not remain on the premises more than thirty (30) days. Such sign shall be building mounted.

    c. Construction Signs. One (1) sign relating to construction projects for new or renovated buildings is permitted without a permit. Such sign shall be no more than thirty-two (32) square feet and may include the name of multiple contractors. Such sign shall be removed one (1) week after issuance of the Certificate of Occupancy. Such sign may be freestanding.

D. Illumination.

1. Illumination Methods Allowed:
    a. Individual internally lit characters;
    b. individual backlit characters or "halo" effect;
    c. gooseneck fixture;
    d. spotlight fixture.

2. Illumination Types Allowed:
    a. LED;
    b. neon;
    c. incandescent.

3. Illumination Standards:
    a. In order to conserve energy and reduce light pollution, on properties abutting residential development, illumination of signs shall be permitted only between the hours of 7:00 a.m. and 11:00 p.m., except that this time restriction shall not apply to the illuminated signs of emergency facilities and retail, commercial, and industrial establishments during such hours as the establishments are open to the general public.

b. All lighting must be Nationally Registered Testing Laboratory (NRTL) listed and stamped.
c. Energy efficiency should be considered a priority in sign design and lighting.

4. External Illumination
   a. Signs shall be illuminated only by steady, stationary, shielded light sources. A lighting fixture that directly or indirectly illuminates a sign must be designed so that the light source itself is shielded from view and does not shine directly into the right-of- way or onto adjacent properties. This does not apply to signs illuminated using neon.

5. Internal Illumination.
   a. Sign Cabinets. Signs may be illuminated from within if the only components illuminated are the characters and limited graphics used to convey the name of the business and its purpose and/or the street number. The balance of the sign face must be opaque with no light visible except to for the cut face characters and logos. No other portion of the sign face may be illuminated. See section 404.6.D for permitted materials. (Ord. of 4-5-10). Internally illuminated flex face signs are not allowed.
   b. Internally lit routed faced vinyl characters and/or logos are allowed so long as the characters and/or logos are the sign, they are building mounted, are limited to 12 inches in height and meet the other size requirements of this section.

E. Sign Materials.

1. Non-Internally Illuminated.
   a. Unless otherwise stated, Signs shall be solid and be constructed of the following materials: wood (painted or varnished and weather treated), stone, metals, concrete, and/or composite material providing similar density.
   b. Signs may incorporate a vinyl wrap, or layer, which displays the graphics proposed, used in lieu of paint. This material standard does not apply to the components of a changeable message board.
2. Internally illuminated.
   a. Internally lit routed faced vinyl characters and/or logos are permitted
   b. Sign Cabinets may consist of an illuminated vinyl sign face. Internally illuminated flex face signs are not permitted, unless:
      i. Used to identify the major tenant of buildings over three (3) floors, as measured from the street level. Such signs are subject to the following:
         (a) The sign shall be placed at the top floor;
         (b) The sign may not be placed on facades facing a property line that directly abuts a residentially zoned property; and
         (c) The sign may be internally illuminated or back lit.

3. Awnings. Metal or canvas awnings are permitted.
4. Window signs. Vinyl window decals are permitted.
5. Open Flags. Fabric flags are permitted.

Commentary: Add the following Definitions to Section 201 which were part of Section 404.

201 Definitions.

Commercial Message. Any wording, logo or other representation that directly or indirectly names, advertises or calls attention to a business, a primary product or service, or other commercial activity.

Nonconforming sign: Any sign that was lawful prior to the adoption, amendment, or revision of this Ordinance but that does not conform to the current requirements of this Ordinance.

Sign: Any device, fixture, placard or structure that uses any color, form, graphic, illumination, symbol or writing to advertise, announce the purpose of, or identify the purpose of a person or entity, or to communicate information of any kind to the public.

Temporary Signage: A sign that is intended to be used for a brief period of time and in compliance with the ordinance standards.

Commentary: The following changes are to code section numbers or labels and do not change any standards.

319 Elms Contract Zoning District:

K. Signage. As regulated by Section 404.6 Signs in the City Center District.

320 Contract Zone 10 – Gateway West (Established 5-6-13; Amended by Ord. 2016-34 on 5-2-16)

N. Signage

(2) Other Signage. Any other signage shall comply with the requirements of Section 404.6 (the provisions for signs in the City Center District) of the Land Use Ordinances.

322 Contract Zone -12 – Rock Row Contract Zone

C. Signage Standards. The Sign Regulations of Section 404 of the Ordinance apply to signage in this Rock Row Contract Zone except as modified by this Section 322.5 C.; although the underlying zoning district for the Development is Gateway Commercial, signage in the Development shall be regulated as though it is located in the City Center District, under Section 404.6 of the Ordinance except as modified herein by this Section.

1. General.
   a. Traffic Safety and illumination. Section 404.6. of the Ordinance notwithstanding, 1) changeable signs shall be allowed as permitted under State law and subject to Section 322.5.C.2.k of the Ordinance, and 2) there is no limitation on the hours during which illuminated signs may operate.

   b. Sign Height. Section 404.6. of the Ordinance notwithstanding, the topmost element of any sign may not be higher than ten (10) feet above the cornice line of any building.

   c. Temporary Signs. Section 404.6.C.11. of the Ordinance notwithstanding:

      1) the maximum area of Real Estate Signs per lot is 144 square feet per lot or building proposed for lease, sale or rent, and such signs shall not be of a banner construction;
      2) the maximum area of a new business sign is 144 square feet and must be attached to the structure, and such signs shall not be of a banner construction; and

3) construction signage may be placed continuously along fencing on public ways that the Development fronts upon so long as such signage does not exceed a height of four feet above the abutting street or sidewalk, whichever is taller, and may be of a banner construction.

2. Sign Types Allowed.

a. Building Mounted Signs.

1) Storefront Building Mounted Sign. Section 404.6.C.1. of the Ordinance notwithstanding,
   a) One Building Mounted sign per tenant on the storefront façade fronting upon a public or private way or a parking area, and for tenants of building corners, an additional sign on the other storefront façade fronting upon another public or private way or parking area, is permitted.
   b) Maximum sign area shall be at the ratio of one (1) square foot per one linear foot of tenant frontage, with a maximum sign area of 10% of the relevant façade wall area.

b. Ground Mounted Signs.
   1) Section 404.6.C.2. of the Ordinance notwithstanding, one ground-mounted sign is permitted per lot

c. Blade Sign.
   1) Section 404.6.C.3. of the Ordinance notwithstanding, one blade sign per tenant is permitted;

f. Entry Point Tenant Directory Sign. Section 404.6.C.6. of the Ordinance notwithstanding, an Entry Point Tenant Directory Sign is permitted for occupants located on the second floor and above for each multi-story building in the Development, which sign may be built similar to a monument sign, shall have a maximum sign height of 6 feet including the base, and shall have a maximum letter height for the building/development name or logo of 8 inches, and for all other lettering, of 4 inches.

i. Canopy or Awning Sign. Section 404.6.C.9. of the Ordinance notwithstanding, canopy or awning signs may include graphics and/or the tenant's logo if the tenant's storefront has no building mounted signs including but not to limited blade signs, and each such canopy or awning may have a length of up to the full length of the storefront. Proof of general liability insurance to protect the City of Westbrook is not required.

<u>Chapter IV – Special Standards and Overlay Districts</u>

407 <u>Residential Growth Area 1 Business Office Overlay Zone</u>

407.5 Performance Standards

Signs: The regulations in Section 404.4 Signs in Residential Growth Area 1, Residential Growth Area 2, Residential Growth Area 3 and Rural Districts, shall apply to all uses in Section 407.

404 Sign Regulations

404.1 **Purpose:** A sign or advertising device of any nature may not be erected on or affixed to any building except as specifically permitted by Section 404.

404.2 **Application Process.**

A. **Permit Required.** Except as otherwise provided herein, a sign or advertising devise of any nature may not be erected on a lot or affixed to the exterior of any building or structure without first obtaining a sign permit from the Code Enforcement Officer.

B. **Computation of Area**. The area of a sign is determined by connecting the exterior points of the signboard or display elements, whichever is larger. It must include any open space between display elements. Display elements include letters, words, trademarks, medallions, symbols, and other devices intended to advertise or indicate the name of the premises, products or services available.(Ord. 8/21/06)

C. **Submission Requirements**. All permit applications shall include:

1. A color drawing showing all sign dimensions and building dimensions as necessary, types of materials, wording, colors to be used, along with any proposed illumination and a visual depiction of where the sign would be located on the site.
2. Day and night renderings for illuminated signs may be required.
3. A fee shall be assessed for the review and administration of all sign permits as set forth in the Master Fee Schedule.

D. **Permit Decision.** Once the CEO is in receipt of a complete application, the CEO shall approve, approved with conditions, or deny the application.

1. The applicant can proceed with sign installation once the Code Enforcement Officer has issued the sign permit.
2. Applicant to contact the Code Enforcement Office once sign is install for verification by CEO that sign was installed per approved plans.

404.3 **General Provisions**.

~~A. **Sign Restrictions**. A sign or advertising device of any nature may not be erected on or affixed to any building except as specifically permitted by Sections 404.2 – 404.7.~~

~~B. **Computation of Area**. The area of a sign is determined by connecting the exterior points of the signboard or display elements, whichever is larger. It must include any open space between display elements. Each face of a sign shall be counted separately when determining the sign area. Display elements include letters, words, trademarks, medallions, symbols, and other devices intended to advertise or indicate the name of the premises, products or services available.(Ord. 8/21/06)~~

A. **Location/Setback.** A sign requiring a sign permit shall be set back a minimum of ½ the minimum yard depth of the underlying zoning district.

B. **Illumination**. In all districts, a lighting fixture that directly or indirectly illuminates a sign, must be designed so that the light source itself is shielded from view and does not shine directly into the right-of-way or onto adjacent properties. This does not apply to signs

illuminated by neon or illuminated tube type signs.

C. **Highway Guide Signs**. The City of Westbrook or the Westbrook/Gorham Community Chamber of Commerce may erect a guide sign on each entrance to Westbrook. Each sign must be placed so as to be in view only from Routes 302, 25, 22, Spring Street, and Stroudwater Street. Maximum size shall be ten feet by twenty feet (10" x 20"), with directions focused on general areas rather than as advertisement for specific businesses.

D. **Consolidated Service Club Sign**. Service clubs in the city may have a consolidated sign in any district on each of Routes 25, 302, 22, Spring Street and Stroudwater Street entering the city. Each sign must meet the following requirements:

1. Size. May not exceed a height of ten (10) feet or a width of ten (10) feet. The sign area for each individual club may not exceed ten (10) square feet.

2. Content. May contain only the name, symbol, meeting time, and meeting place of each service club.

3. Illumination. May not be internally illuminated.

E. **Temporary Signs on Public Property or within the Public Right-of-Way.** Temporary signs shall be allowed on public property or within the public right-of-way, with no permit required, for a period of no more than twelve (12) weeks in a calendar year provided the following criteria are met:

1. Only noncommercial signage is permitted on public property or within the public right of way. Signs bearing a commercial message are prohibited.

2. A temporary sign may not exceed two feet by three feet (2'x3') in size.

3. A sign under this paragraph must include or be marked with the name and address of the individual, entity or organization that placed the sign within the public right-of-way and the date the sign was erected within the public right-of-way.

4. A temporary sign shall not result in a sight, traffic, health or welfare hazard to pedestrian or vehicular traffic due to placement, or manner of construction or display.

5. Any damage to public property or utilities that is caused by a temporary sign, including but not limited to sign installation, is the responsibility of the sign owner. The Director of Public Services shall determine whether damage has occurred and the cost of repair. The sign owner will then be notified in writing and payment is required within 30-days of the date of notice.

6. A temporary sign may not be placed within 30-feet of another temporary sign bearing the same or substantially the same message.

7. Illumination of a temporary sign is prohibited

8. For the purpose of temporary signs located within the Shoreland Zone, signs shall

be considered to be a structure and must comply with all Shoreland Standards, including but not limited to, setbacks and permitting. No signs are permitted below the normal high-water line of a water body or within a wetland.

9. Signs shall not be erected or maintained on the following:
   a. A traffic control sign or device
   b. A public utility pole or fixture
   c. A rotary traffic island
   d. A tree on public property or within a public right-of-way
   e. A control-of-access right of way area
   f. A median less than six (6) feet wide

10. Temporary Signs are prohibited from being affixed to the grounds of the following locations:
    a. Saccarappa Park, Warren Memorial Sculpture Garden, Riverbank Park, Westbrook Commons.
    b. Temporary signs located on the Westbrook Community Center parcel (010-029B) unless such signs are set back a minimum of two hundred fifty (250) feet from Bridge Street.
    c. Public school grounds.
    d. Cemeteries.

11. Removal Process: Removal of unlawful signs shall be conducted in accordance with Maine State Statutes Title 23 Part 1Chapter 21 Section 1917.

F. **Banner Signs in the Public Right-of-Way**.

1. The Director of Public Services may permit a system of decorative banners or banners identifying community events open to the public to be placed by a business group or civic group on light poles on public property along Main Street, William Clark Drive, or Bridge Street. Signage shall not be deemed permanent.

2. The Director of Public Services may permit a person or organization to install a banner sign across a public right-of-way under the following conditions:

   a. Citywide Interest. The purpose of the banner must be to announce a function of citywide interest, including church events, concerts, fund-raisers or similar activities.

   b. State and Local Law. The installation of the banner must meet all the requirements of state and local law. The person requesting the installation of the banner must provide a sketch showing the dimensions, method of installation, materials, and text of the banner. The Director of Public Services shall establish the dates of installation and removal.

   c. See Chapter 29 Art. VII for Process on Banner Signs in the Public Right of Way.

G. **Nonconforming Signs**. Nonconforming signs shall be subject to the following provisions

1. **Continuance.** Nonconforming signs may continue to exist, so long as the use

remains the same, the business remains open to the public, and if the signs are maintained in a safe, neat and clean conditions.

2. **Discontinuance.** Any sign, along with its supports, which no longer advertises an existing business, primary product sold, activity being conducted, or public notice, shall be taken down and removed by the owner, agent or person having beneficial use of the building or premises upon which such sign may be found within twelve (12) months after the activity has ceased.

3. **Alteration or Relocation.** The Code Enforcement Officer may approve the alteration or relocation of a lawfully nonconforming sign so long as it is reduced in size by at least twenty-five percent (25%) of the original sign size. This could be achieved through eliminating signs or reducing the overall size of the sign. Where there are additional alterations or relocations beyond that there must be an additional reduction in size of at least twenty-five percent (25%) until such time as the sign size is no longer non-conforming. Alteration could include a change in illumination, or of any component of the sign other than for basic maintenance to ensure a safe, neat and clean condition

   a. The repair or replacement of a panel within a nonconforming sign is permitted without reduction provided no other components of the sign, including but not limited to sign frame, supports and illumination are altered or relocated.

   b. The Code Enforcement Officer may permit the repair of a nonconforming sign without reduction provided the repair is to the benefit of public health and safety, or the damage was caused by a weather or other third-party event that is no fault of the property owner.

4. Any entity proposing a development requiring Site Plan Review shall, as a condition of any approval of such development proposal, be required to bring any signs into conformance with the provisions of this ordinance, except as follows:

   a. Individual lawfully nonconforming signs which are within developments seeking amended Site Plan Review approval and which will not be altered as part of the proposed project are not required to be brought into conformance with this ordinance unless the development proposal involves at least a twenty percent (20%) increase in the total on-site building footprint or a change in use of the property. New and altered signs in such developments shall conform to this Ordinance.

H. **Variance.** The granting of a variance from the Sign Ordinance provisions is prohibited.

~~404.2~~ **404.4 Signs in ~~Residential~~ Residential Growth Area 1, Residential Growth Area 2, Residential Growth Area 3 and Rural Districts**. The following provisions apply to signs in residential zoning districts:

A. General

1. All signs or advertising devices must be permanently affixed to the real estate. They may only identify the occupant of the premises or advertise the article or services available on the premises on which they are situated.

B. Sign Types

1. Ground Mounted Signs

~~Name of Occupant and Street Number. One (1) sign is permitted displaying the name of the occupant of the premises, the street number, or both. A sign may not exceed one square foot in area for each visible face of the sign. It may have not more than two (2) faces. It may be attached to a building, or it may be erected on a rod or post not more that six (6) feet high and at least three (3) feet away from the street line. The sign may include the identification of an occupation. It may only relate to the person or services available on the premises.~~

~~B.~~ a. Bulletin Board or Identification Sign.

i. One (1) bulletin board or identification sign for a permitted non-residential building or use, containing not more than six (6) square feet of signboard area.

ii. For churches, schools, and public institutions, two (~~1~~ 2) bulletin boards ~~of~~ or identification signs are permitted for each building. Each sign may contain not more than ten (10) square feet of signboard area.

iii. ~~It~~ A bulletin board or informational sign must be set back at least one-half (1/2) of the required front yard depth.

~~C.~~ b. Rental Area. On the premises of an apartment building or rental housing area, there may be one (1) identifying sign containing not more than six (6) square feet of signboard area.

c. Subdivision Sign.

i. Temporary. A temporary sign is allowed without a permit to advertise an approved subdivision site while construction is under way. The sign may not contain more than twelve (12) square feet of signboard area.

ii. Permanent. A permanent sign is permitted to identify a neighborhood that has been created as the result of a subdivision approved by the Planning Board. The sign may not be placed in the right-of-way, nor block safe sight distances along a road. Total area of sign shall not exceed 16 square feet.

~~D. Non-conforming Use. On the premises of a non-conforming use or a conditional use, there may be one (1) sign containing not more than ten (10) square feet of signboard area.~~

2. Temporary Signs not located on Public Property or within the Public Right-of-Way

~~E.~~ a. ~~For Sale~~ Real Estate Signs. One (1) "For Sale," "For Rent," or "For Lease" sign is allowed without a permit ~~permitted~~ on the property, containing not more than six (6) square feet of signboard area and advertising only the premises on which the sign is located. Where the property fronts on two streets, one (1) sign is permitted facing each street.

~~F.~~ b. ~~Building Under~~ Construction Sign. On the premises of a building under

construction or renovation, one (1) sign not exceeding five (5) square feet of signboard area is allowed without a permit ~~permitted~~ per contractor, subcontractor, or architect actually employed on the premises. Total area of all signs shall not exceed thirty-two (32) square feet.

~~G. Subdivision Sign.~~

~~(1) Temporary. A temporary sign is permitted to advertise a subdivision site while construction on the sale of the completed homes is under way. The sign may not contain more than twelve (12) square feet of signboard area.~~

~~(2) Permanent. A permanent sign is permitted to identify a neighborhood that has been created as the result of a subdivision approved by the Planning Board. The sign may not enter the right-of-way, nor block safe sight distances along a road.~~

~~H.~~ 3. ~~Business~~ Building Mounted Signs.

~~(1)~~ a. Sign Allowance

i. On the premises of a business which is legally operating in a residential zoning district, other than those described in Section 404.2 ~~4~~.A, there may be one (1) sign advertising that business containing an area of not more than sixteen (16) square feet. ~~The sign must be attached to the building in which the business is situated.~~

ii. All signs or advertising devices must be permanently affixed to the structure in which the business is located. Unless otherwise permitted, signs shall not contain any visible moving or movable parts.

4. Changeable Message Board. Changeable message board signs are allowed and are calculated within the allowable sign area for the business. Changeable message boards may change not more than once every 5-minutes and shall maintain an unlit background with only the illumination of the lettering or text.

~~a. Temporary. A sign erected under Section 404.2.H is temporary and does not become a non-conforming use. If this ordinance is amended so that such signs become illegal, the owner of the premises on which the sign is constructed must remove it or make it conform to the amended Ordinance.~~

b. ~~Stationary~~. ~~All signs or advertising devices must be permanently affixed to the structure. They may not contain any visible moving or movable parts except as described in Section 404.3.G below. The lighting of neon or other illuminated tube-type signs or advertising device is not allowed in residential districts.~~

~~2. Legal Non-conforming business. Legally existing non-conforming signs may continue to be used and may be repaired, but the Code Enforcement Officer must find that the sign is not otherwise altered, enlarged or relocated. Where the Code Enforcement Officer finds that such a sign is otherwise altered or relocated:~~

~~a. The Code Enforcement Officer may approve the alteration or relocation of a nonconforming free-standing sign so long as it is reduced in size by at least 25% of the original sign size. Where there are additional alterations or relocations beyond that~~

~~there must be an additional reduction in size of at least 25% until such time as the sign size is no longer non-conforming.~~

~~(b) The Code Enforcement Officer may approve the alteration or relocation of nonconforming building mounted signs so long as the sign area is reduced in size by at least 25% of the original sign area. This could be achieved through eliminating signs or reducing the overall size of building mounted signs. Where there are additional alterations or relocations beyond that there must be an additional reduction of at least 25% until such time as the sign size is no longer nonconforming.~~

(c) ~~Internally illuminated signs may only be turned on (illuminated) during hours when the business is open to the public and message boards may change not more than once every 24 hours.~~

~~(Ord. of 9-13-10)~~

C. **Illumination.** The lighting of neon or other illuminated tube-type signs or advertising device is not allowed in Residential Growth Area 1, Residential Growth Area 2, Residential Growth Area 3 and Rural districts.

D. **Materials.**
1. Signs shall be constructed of sturdy material.
2. No sign shall be constructed of banners, ribbons, spinners, feather flags or other similar devices that represent a visual distraction to the motoring public.

~~404.3~~ **404.5 Signs in Highway Services District, Gateway Commercial District, Industrial Park Zoning District, Manufacturing District and Prides Corner Smart Growth Area**. The following provisions apply to signs in the Highway Services District, Gateway Commercial District, Industrial Park District, Manufacturing District and Prides Corner Smart Growth Area: (Ord. of 03-07-05; 05-15-06; 06-22-09)

A. ~~Stationary~~ **General.**
1. All signs or advertising devices must be permanently affixed to the real estate. They may only identify the occupant of the premises or advertise the article or services available on the premises on which they are situated.

~~B.~~ 2. Number of Signs. Maximum Height. On each lot, not more than two (2) signs are permitted affixed to each exterior face of a building fronting on a public street or parking lot for each occupant. The topmost element of any sign may not be higher than ten (10) feet above the cornice line of the building. (Ord. of 6-22-09)

3. Overhanging Signs. Signs may not overhang the public right-of-way.

~~C. Area of Sign~~. B. **Total Sign Allowance** ~~The total area of all signs permitted on the face of a building fronting on a public street or parking lot may not exceed one hundred (100) square feet for each twenty-five (25) feet of building frontage; except that in the Industrial Park District, the total area may not exceed two hundred (200) square feet.~~

1. **Highway Services and Gateway Commercial Districts.**

a. The total area of all signs for ~~a property in the Highway Services District and for~~ properties located in the Highway Services and ~~the~~ Gateway Commercial Districts that are forty thousand (40,000) square feet or less in land area shall not exceed five hundred (500) square feet.

b. The total area of all signs ~~and~~ for properties located in the Highway Services and Gateway Commercial Districts that are ~~of~~ more than forty thousand (40,000) square feet of land area ~~in the Gateway Commercial district~~ shall not exceed five hundred (500) square feet for the first 40,000 square feet of land area plus one hundred (100) square feet for each additional forty thousand (40,000) square feet of land area.

2. **Industrial Park District.** The total area of all signs for ~~a property~~ properties in the Industrial Park District shall not exceed three hundred (300) square feet.

3. **Manufacturing District and Prides Corner Smart Growth Area.** The total area of all signs for ~~a property~~ properties located in the ~~remaining districts~~ Manufacturing District and Prides Corner Smart Growth Area shall not exceed two hundred and fifty (250) square feet. (Ord. 01-26-06; 05-15-06; 6-22-09; 11-19-12)

C. Sign Types Allowed

1. Building Mounted Signs
   a. The total area of all signs permitted on the face of a building fronting on a public street or parking lot may not exceed one hundred (100) square feet for each twenty-five (25) feet of building frontage; except that in the Industrial Park District, the total area may not exceed two hundred (200) square feet.

~~D.~~ 2. ~~Free-Standing~~ Ground Mounted Signs.

a. Sign Allowance. Where buildings are set back at least forty (40) feet, one (1) free-standing sign may be erected within the open space fronting upon a public street. The topmost element of a free-standing sign may be no more than twenty- five (25) feet above the average level of the ground between the supports of the sign. The sign must not obstruct the view of oncoming pedestrian or motor vehicle traffic.

i. Divided Building. Where a building is divided by partitions and is occupied by separate entities, and where the building is constructed so that part of it is located within forty (40) feet of a public way and one or more of the entities within is entirely located at least forty (40) feet back from that way, there may be one (1) free-standing sign within the open space fronting upon the way. Only those entities located at least forty (40) feet back may utilize space on this sign.

b. Computation of Sign Area ~~of Free-Standing Sign~~. A free-standing sign may have an area of not more than one hundred (100) square feet. Any exterior linear dimension of a free-standing sign may not exceed sixteen (16) feet. (Ord. 05-15-06; 08-21-06; 6-22-09)

3. Changeable Message Boards.
   a. Changeable message board signs are permitted provided they are a permanent

component of the sign and are calculated within the allowable sign area for the structure. Messages shall change at intervals of no more than once every five (5) minutes. Changeable message boards shall maintain an unlit background with only the illumination of the lettering or text. The total size of a changeable message board area shall not exceed sixty (60) square feet.

~~E. Illuminated Signs. Illuminated signs are permitted but they may not be intermittently illuminated or animated, with the exception of changeable electronic board signs. in which the message changes at intervals of more than once every five (5) minutes and where the sign is a permanent component of the sign design and module. The total size of the changeable board area shall not exceed sixty (60) square feet.~~

~~F.~~ 4. ~~Informational~~ Directional Signs. ~~Informational~~ Directional signs no larger than four (4) square feet, and containing no advertising are permitted on private property to direct traffic flow, indicate parking space, or provide other essential information to guide vehicular or pedestrian traffic flow with respect to that property.

5. Time and Temperature Signs. Time and temperature signs are permitted and must be included in the total square footage allotment for the structure.

6. Awning signs.
   a. Awning signs are permitted and are calculated within the allowable sign area for building mounted signage.
   b. Awnings may not be internally illuminated but may include lighting located beneath the awning directed downward for the purpose of illuminating the building entrance only.
   c. Awnings are allowed no lower than nine (9) feet above the average grade of the ground beneath it
   d. Awning signs may include the street address and/or business name only.
      i. Such information shall be no more than twelve (12) inches in height and shall be placed on the front flap of the awning.

7. Temporary Signs not located on Public Property or within the Public Right of Way. The following signs are allowed on a temporary basis as follows and, unless otherwise stated, shall be securely affixed to the ground during the time allowed.

   a. Real Estate Signs. One real estate sign of no more than sixteen (16) square feet is allowed without a permit per lot proposed for lease, sale, or rent. The subject sign must be placed on the lot proposed for lease, sale, or rent. Such sign must be moved within two (2) weeks after the transaction. Such sign may be freestanding or building mounted.

   b. New Business Sign. One (1) sign is permitted advertising the opening of a new business. Such sign shall be of no more than fifteen (15) square feet and shall not remain on the premises more than thirty (30) days. Such sign shall be building mounted.

   c. Construction Signs. One (1) sign relating to construction projects for new or renovated buildings is allowed without a permit. Such sign shall be no more than thirty-two (32) square feet and may include the name of multiple

contractors. Such sign shall be removed one (1) week after issuance of the Certificate of Occupancy. Such sign may be freestanding.

D. Illumination. Illuminated signs are permitted but they may not be intermittently illuminated or animated, with the exception of changeable message board signs which must comply with the standards as stated in this section.

~~G.~~ E. Prohibited Materials. ~~Signs can be made of multiple materials.~~ Signs shall be constructed of sturdy material. No sign shall be constructed of banners, ribbons, spinners, feather flags or other similar devices that represent a visual distraction to the motoring public.

~~H. Overhanging Signs. Signs may not overhang the public right-of-way.~~

~~I. Time and Temperature Signs. Time and temperature signs are permitted in these districts, but must be included in the total square footage allotment for the structure.~~

~~J. Sandwich Board Signs (Removed per Ord. of 6-22-09)~~

~~4043.1~~ **404.6 Signs in the City Center District.** The following provisions apply to signs in the City Center District: (Ord. of 6-1-09; 6-22-09; 4-5-10)

~~*Preamble to District*~~

~~The purpose of the City Center Zoning District is to create a flexible atmosphere for the return of the downtown to a prominent regional service center. Flexible setbacks will be balanced with an overlay of design standards to encourage new development that will be consistent with the goals established in the City's Comprehensive Plan, Downtown Revitalization Plan, and Westbrook Riverfront Master Plan.~~

A. **Purpose.** The purpose of regulating signs is to promote and protect the public health, safety, and welfare by regulating existing and proposed outdoor advertising, outdoor advertising signs, and outdoor signs of all types; to protect property values; enhance and protect the physical appearance of the community; preserve the scenic and natural beauty, and provide a more enjoyable and pleasing community; to reduce sign or advertising distractions and obstructions that may contribute to traffic accidents; reduce hazards that may be caused by signs overhanging or projecting over public right of way; provide more open space, and curb the deterioration of natural beauty and the community environment.

~~**404.3.1.1**~~ **B. General.**

~~A. Purpose. The purpose of regulating signs is to promote and protect the public health, safety, and welfare by regulating existing and proposed outdoor advertising, outdoor advertising signs, and outdoor signs of all types; to protect property values; enhance and protect the physical appearance of the community; preserve the scenic and natural beauty, and provide a more enjoyable and pleasing community; to reduce sign or advertising distractions and obstructions that may contribute to traffic accidents; reduce hazards that may be caused by signs overhanging or projecting over public right of way; provide more open space, and curb the deterioration of natural beauty and the community environment.~~

~~B.~~ 1. Traffic safety ~~and illumination~~.

a. No sign, whether new or existing, shall be permitted that causes a visual obstruction or a traffic, health or welfare hazard or results in a nuisance due to illumination, placement, ~~display,~~ or manner of construction or display.

~~1. District setback requirements do not apply to signs. Any sign setback requirements shall be stated within this section.~~

~~2. Signs shall be illuminated only by steady, stationary, shielded light sources directed solely on the sign without causing glare or by constant internal illumination. Any light source shall be shielded such that bulbs are not directly visible from neighboring properties or public ways. (Ord. of 4-5-10)~~

~~3. In order to conserve energy and reduce light pollution, on property abutting residential development, illumination of signs shall be permitted only between the hours of 7:00 a.m. and 11:00 p.m., except that this time restriction shall not apply to the illuminated signs of emergency facilities and retail, commercial, and industrial establishments during such hours as the establishments are open to the general public.~~

~~4.~~ b. No sign, except traditional barber poles for licensed and operating barber shops, shall have visible moving parts, blinking, moving or glaring illumination, or any part consisting of pennants, ribbons, streamers, spinners, feather flags or other similar devices that represent a visual distraction to the motoring public.

~~C.~~ 2. Business Signs. Business signs are allowed and shall be constructed, installed and maintained so as to ensure public safety. Such signs shall be clearly incidental, customary to, and commonly associated with and in the same site as the building or establishment to which it refers and shall be limited in subject matter to name, design, picture or trademark of the establishment. It shall not include any general commercial advertising materials unrelated to a principal business within the building. Signs not directly related to the business shall be prohibited. All such signs shall be appropriate in scale and appearance. Business signs on adjacent buildings located on the same parcel shall be of compatible design and character. Sign types and placement are further described herein.

~~D. Sign Permits. Except as otherwise provided herein, a sign or advertising devise of any nature may not be erected on a lot or affixed to the exterior of any building or structure without first obtaining a sign permit from the Code Enforcement Officer. All permit applications shall include a color drawing showing all dimensions, types of materials, wording, colors to be used, any proposed illumination and a visual depiction of where the sign would be located on the site.~~

3. Insurance. For any sign proposed to be placed on (sandwich board sign only) or that shall extend into (blade and/or awning only) the public right-of-way a permit is required on an annual basis and shall be accompanied by proof of general liability insurance coverage in the amount of ~~$100,000.00/$300,000.00~~ $400,000.00 or any higher limit of liability imposed by the Maine Tort Claims Act in order to protect the City of Westbrook from any and all liability for personal or property damage to the public by reason of the erection and maintenance of such sign on and into the public

right- of-way and shall maintain such insurance as long as such sign exists on and into the public right-of-way. The City shall be named as an additional insured on such insurance policy.

~~E. A fee shall be assessed for the review and administration of all sign permits.~~

~~*E.* Awning. *(Removed 4-5-10)*~~

~~F.~~ 4. Sign Area Computation. Signs shall be measured from the outermost part of the sign, but not to include wall supports. Sign area includes borders or framing not required to affix a sign to a building. Sign area does not include the base for a ground mounted monument sign or the supportive pole(s) of a pylon sign. A sign with a double signboard or display area shall be construed to be one sign for the purpose of this Ordinance.

~~G. No sign shall extend above the roofline or parapet of the building on which it is placed.~~

~~H. Street Number Signs. All buildings are required to display one (1) street number sign per exterior face of building fronting on a public way or parking lot. Such sign may be no more than one and a half (1.5) square feet in size and must be located on the first floor façade area of a building or on a sign. Such sign shall not count toward the overall sign allowance.~~

~~I. Temporary Signs. The following signs are allowed on a temporary basis as follows and shall be securely affixed to the ground during the time allowed.~~

~~1. Real Estate Signs. One real estate sign of no more than eight (8) square feet is allowed per lot proposed for lease, sale, or rent. The subject sign must be placed on the lot proposed for lease, sale, or rent. Such sign must be moved within two (2) weeks after the transaction. Such sign may be freestanding or building mounted.~~

~~2. New Business Sign. One sign is permitted for a new business. Such sign shall be of no more than fifteen (15) square feet and shall not remain on the premises more than thirty (30) days before and after the opening of such business. Such sign shall be building mounted.~~

~~3. Construction Signs. One sign relating to construction projects for new or renovated buildings are allowed. Such sign shall be no more than thirty-two (32) square feet and may include the name of multiple contractors. Such sign shall be removed one (1) week after issuance of the Certificate of Occupancy. Such sign may be freestanding.~~

~~4. Temporary Community Event Signs. As further described in this section, such signs may be allowed by approval of the Code Enforcement Officer and shall not be located in such a manner as to obstruct pedestrian or vehicular traffic.~~

~~J. Nonconforming signs. Nonconforming signs shall be subject to the following~~

~~provisions.~~

~~1. Nonconforming signs may continue to exist, so long as the use remains the same, the business remains open to the public, and if the signs are maintained in a safe, neat and clean condition.~~

~~2. The Code Enforcement Officer may approve the alteration or relocation of a legally nonconforming sign so long as it is reduced in size by at least 25% of the original sign size. This could be achieved through eliminating signs or reducing the overall size of the sign. Where there are additional alterations or relocations beyond that there must be an additional reduction in size of at least 25% until such time as the sign size is no longer non-conforming. Alteration could include a change in color, material illumination, or of any component of the sign other than for basic maintenance to ensure a safe, neat and clean condition.~~

~~i. The repair or replacement of a panel within a nonconforming sign is permitted without reduction provided no other components of the sign are altered or relocated.~~

~~ii. The Code Enforcement Officer may permit the repair of a non-conforming sign without reduction provided the repair is to the benefit of public health and safety, or the damage was caused by a weather or other third party event that is no fault of the property owner.~~

~~K. Removal of Signs. Any sign, along with its supports, which no longer advertises a bonafide business conducted, primary product sold, activity being conducted, or public notice, shall be taken down and removed by the owner, agent or person having beneficial use of the building or premises upon which such sign may be found within six (6) months after the activity has ceased, or if the removal has not occurred, within ten (10) days after written notification from the Code Enforcement Officer.~~

~~L. Definitions. In addition to those provided within Section 201, the following definitions shall apply to this section.~~

~~1. Animated sign: Any sign that uses movement or change of lighting to depict action or create a special effect or scene that has the result or intent of distracting the eye.~~

~~2. Commercial message: Any sign wording, logo, or other representation that, directly or indirectly, names, advertises or calls attention to a business, a primary product, service or other commercial activity.~~

~~3. Temporary Community Events: Banners located in the public right-of- way intended to serve a community purpose or convey information of community-wide interest.~~

~~4. Nonconforming sign: Any sign that was lawful prior to the adoption, amendment, or revision of this Ordinance but that does not conform to the current requirements of this Ordinance.~~

~~5. Public way: Any way designed for vehicular or pedestrian use and is maintained with public funds.~~

~~6. Sign: Any device, fixture, placard or structure that uses any color, form, graphic, illumination, symbol or writing to advertise, announce the purpose of, or identify the purpose of a person or entity, or to communicate information of any kind to the public.~~

~~7. Visible: Capable of being seen without visual aid by a person of normal visual acuity.~~

~~8. Window sign: Any sign, picture, symbol or combination thereof, designed to communicate information about an activity, business, commodity, event, sale or service, placed inside a window, and visible from the exterior of the window.~~

~~404.3.1.2 Illumination.~~

~~Lighting Methods Allowed: Individual internally lit characters; individual backlit characters or "halo" effect; gooseneck fixture; or spotlight fixture.~~

~~Lighting Types Allowed: LED; neon; or incandescent.~~

~~A lighting fixture that directly or indirectly illuminates a sign must be designed so that the light source itself is shielded from view and does not shine directly into the right-of- way or onto adjacent property under different ownership. This does not apply to signs illuminated using neon.~~

~~All lighting must be UL (Underwriters Laboratory) listed and stamped. Energy~~

~~efficiency should be considered a priority in sign design and lighting.~~

~~Signs may be illuminated from within if the only components illuminated are the characters and limited graphics used to convey the name of the business and its purpose and/or the street number. No other portion of the sign face may be illuminated. See section 404.3.1.2 for permitted materials. (Ord. of 4-5-10)~~

~~404.3.1.3~~ C. Sign Types Allowed.

~~A.~~ 1. Building Mounted. Building mounted signs include those that are painted or flush-mounted directly on an exterior building façade. Backlit characters and internally lit characters are considered flush mounted for the purpose of this Ordinance.

a. Signage Limitations
   i. The total area of all building mounted signs may not exceed five percent (5%) of the exterior wall facing a public way or parking lot on which the sign(s) is to be placed.
   ii. On any exterior wall facing a public way or parking lot, one (1) sign is permitted per individually owned and operated business within the building based on the sign area allowed per this subsection.
   iii. No sign shall extend above the roofline or parapet of the building on which it is placed.

b. Identification Sign.
   i. All buildings are required to display one (1) street number sign per exterior

face of building fronting on a public way or parking lot.

ii. Such sign may be no more than one and one-half (1.5) square feet in size, and it

iii. must be located on the first-floor façade area of a building or on a sign.

iv. Such sign shall not count toward the overall sign allowance.

~~B.~~ 2. Ground Mounted Signs. Sign area for ground mounted signs shall be no more than eighteen (18) square feet including all tenant signage.

~~1.~~ a. Monument Signs. Ground mounted monument signs are signs mounted to the ground by a solid (opaque) base structure made of wood (painted or varnished and weather treated), brick, or stone. Such sign shall be no taller than six (6) feet including the base.

~~2.~~ b. Pylon Signs. Pylon signs are signs mounted to the ground by poles made of materials consistent with this section. Such sign shall be no taller than nine (9) feet including the base.

~~C.~~ 3. Blade. Blade signs are attached directly to the building and extend perpendicular from the building wall ~~and generally extend more than ten (10) inches from the face of the wall~~.

a. Blade signs may be no more than fifty (50) square feet in size,

b. Shall be placed no lower than ten (10) feet above the average grade beneath the sign, and

c. Shall be no higher than twenty (20) feet above the average grade beneath the sign.

d. Blade signs shall ~~not~~ extend no further into a right of way than the lessor of ~~more than~~ four (4) feet ~~into a public right-of-way and shall not extend into~~ or the backside of the curb abutting a public street.

e. Blade signs ~~are~~ may be permitted ~~allowed~~ every twenty-five (25) feet of linear frontage on a freestanding building.

~~D.~~ 4. Changeable Message Board. A changeable message board sign is a sign attached to and associated with a freestanding (ground mounted or pylon) sign.

a. Changeable Message board signs are ~~allowed~~ permitted where freestanding signs area ~~allowed~~ permitted and are calculated within the allowable sign area for the proposed freestanding sign.

b. Such signs shall be no taller than twelve (12) inches including framing and shall include no more than two (2) lines of text.

c. Such sign may include a changeable message but the message may not change more than once every five (5) minutes.

d. The time and temperature may be posted and are part of the maximum allowable sign area of the message board.

e. The changeable message board shall maintain an unlit background with only the illumination of lettering or text permitted.

~~F.~~ 5. Sandwich Board Signs.

a. One (1) small A-frame sandwich board sign is allowed per twenty-five (25) feet of linear building frontage on Main Street or Bridge Street.

b. Such signs shall not count toward the number of signs allowed per exterior face of building.

c. Such signs are allowed when there is at least four (4) feet of clear travel space on a public sidewalk.
d. Sandwich board signs may be no more than eight (8) square feet in size and shall not extend into the four (4) feet of clear travel space.
e. Such signs may have writing on both sides,
f. May not be illuminated,
g. Shall have no moving parts,
h. Must be placed adjacent to the business which it supports, and
i. Shall not block pedestrian movement along a sidewalk or vehicular visibility.
j. Such signs shall face on-coming sidewalk traffic and not the street.
k. In the event that these provisions are violated or in the event of inclement weather, the Code Enforcement Officer may have such signs removed from the public way.
l. Sandwich board signs shall be temporary in nature and shall advertise temporary events.

~~G.~~ 6. Entry Point Tenant Listing Sign. One (1) small tenant listing sign is allowed per individual building and may list multiple tenants. Such sign may be no more than one and a half (1.5) square feet.

~~H.~~ 7. Directional Signs.
a. Such signs may be freestanding or building mounted and shall not count toward the number of signs allowed per exterior face of building.
b. Directional signs shall contain no business advertising and are permitted on private property in order to direct traffic flow, indicate the location of parking, or provide other essential information necessary to guide vehicular or pedestrian traffic flow within the private property.
c. Such signs shall be no larger than two (2) square feet. Tenant listing signs shall not be considered directional signs.

~~I. Temporary Community Event Signs. With prior written approval from the Director of Public Services, a system of decorative banners or banners identifying community events open to the public may placed by a business group or civic group on light poles on public property along Main Street, William Clark Drive, or Bridge Street. Such signs shall be temporary.~~

~~J.~~ 8. Window Signs.
a. Window signs shall be permitted on the first or ground floor only.
b. In no event shall window signs cover more than twenty-five (25) percent of the area of any individually framed window.
c. Window signs shall not be included in the sign area when calculating the total area of all building mounted signs.

~~K.~~ 9. Awning.
a. Awnings may not be internally illuminated but may include lighting located beneath the awning directed downward for the purpose of illuminating the building entrance only ~~include illumination on the awning itself~~.
b. Awnings are allowed no lower than nine (9) feet above the average grade of the public sidewalk beneath it, and
c. Shall not extend more than four (4) feet into a public right-of-way, and
d. Shall not extend into the curb abutting a public street.

e. Awnings may include the street address and/or business name only.
   i. Such information shall be no more than twelve (12) inches in height and shall be placed on the front flap of the awning.
f. In addition to these standards, awnings located within the Village Review Overlay Zone shall conform to the standards as outlined in Section 403, Village Review Overlay Zone. (Ord. 4-5-10)

~~L.~~ 10. Open Flag.
   a. A standard flag, no larger than 3'x5' in size suspended from a pole that is attached to a structure indicating that an establishment is "open for business".
   b. An Open Flag may not impede pedestrian travel within the public right-of-way.
   c. One (1) open flag is permitted per individually owned and operating business within a building.
   d. Open Flags are allowed every twenty-five (25) feet of linear frontage on a freestanding building.

11. Temporary Signs not located on Public Property or within the Public Right of Way. The following signs are allowed on a temporary basis as follows and, unless otherwise stated, shall be securely affixed to the ground during the time allowed.

   a. Real Estate Signs. One real estate sign of no more than eight (8) square feet is permitted without a permit per lot proposed for lease, sale, or rent. The subject sign must be placed on the lot proposed for lease, sale, or rent. Such sign must be moved within two (2) weeks after the transaction. Such sign may be freestanding or building mounted.

   b. New Business Sign. One (1) sign is permitted advertising the opening of a new business. Such sign shall be of no more than fifteen (15) square feet and shall not remain on the premises more than thirty (30) days. Such sign shall be building mounted.

   c. Construction Signs. One (1) sign relating to construction projects for new or renovated buildings is permitted without a permit. Such sign shall be no more than thirty-two (32) square feet and may include the name of multiple contractors. Such sign shall be removed one (1) week after issuance of the Certificate of Occupancy. Such sign may be freestanding.

D. Illumination.

1. Illumination Methods Allowed:
   a. Individual internally lit characters;
   b. individual backlit characters or "halo" effect;
   c. gooseneck fixture;
   d. spotlight fixture.

2. Illumination Types Allowed:
   a. LED;
   b. neon;
   c. incandescent.

3. Illumination Standards:

a. In order to conserve energy and reduce light pollution, on properties abutting residential development, illumination of signs shall be permitted only between the hours of 7:00 a.m. and 11:00 p.m., except that this time restriction shall not apply to the illuminated signs of emergency facilities and retail, commercial, and industrial establishments during such hours as the establishments are open to the general public.
b. All lighting must be Nationally Registered Testing Laboratory (NRTL) listed and stamped.
c. Energy efficiency should be considered a priority in sign design and lighting.

4. External Illumination
   a. Signs shall be illuminated only by steady, stationary, shielded light sources. A lighting fixture that directly or indirectly illuminates a sign must be designed so that the light source itself is shielded from view and does not shine directly into the right-of- way or onto adjacent properties. This does not apply to signs illuminated using neon.

5. Internal Illumination.
   a. Sign Cabinets. Signs may be illuminated from within if the only components illuminated are the characters and limited graphics used to convey the name of the business and its purpose and/or the street number. The balance of the sign face must be opaque with no light visible except to for the cut face characters and logos. No other portion of the sign face may be illuminated. See section 404.6.D for permitted materials. (Ord. of 4-5-10). Internally illuminated flex face signs are not allowed.
   b. Internally lit routed faced vinyl characters and/or logos are allowed so long as the characters and/or logos are the sign, they are building mounted, are limited to 12 inches in height and meet the other size requirements of this section.

~~404.3.1.4~~ E. Sign Materials.

1. Non-Internally Illuminated.
   a. Unless otherwise stated, Signs shall be ~~constructed~~ solid and be constructed of the following materials: ~~including~~ wood (painted or varnished and weather treated), stone, metals, concrete, and/or composite material providing similar ~~texture~~ density.~~, except that:~~
   b. Signs may incorporate a vinyl wrap, or layer, which displays the graphics proposed, used in lieu of paint. This material standard does not apply to the components of a changeable message board.
2. Internally illuminated.
   a. Internally lit routed faced vinyl characters and/or logos are permitted
   b. Sign Cabinets may consist of an illuminated vinyl sign face. Internally illuminated flex face signs are not permitted, unless:
      i. Used to identify the major tenant of buildings over three (3) floors, as measured from the street level. Such signs are subject to the following:
         (a) The sign shall be placed at the top floor;
         (b) The sign may not be placed on facades facing a property line that directly abuts a residentially zoned property; and
         (c) The sign may be internally illuminated or back lit.

3. Awnings. Metal or canvas awnings are permitted.
4. Window signs. Vinyl window decals are permitted.
5. Open Flags. Fabric flags are permitted.

~~1) Awnings may be constructed of metal or canvas.~~
~~2) Signs without internal illumination may incorporate a vinyl wrap, or layer, which displays the graphics proposed. This is often used in lieu of paint.~~
~~3) Internally illuminated flex faced signs are not allowed. Such signs consist of an illuminated vinyl sign face. Internally illuminated sign boxes with cut out characters are allowed. The balance of the sign face must be opaque with no light visible except to for the cut face characters and logos.~~
~~4) Internally lit routed faced vinyl characters and/or logos are allowed so long as the characters and/or logos are the sign, they are building mounted, are limited to 12 inches in height and meet the other size requirements of this section.~~
~~5) Signs may also include plastic when:~~
~~a) The sign is used to identify the major tenant of buildings with over three (3) floors, as measured from the street level;~~
~~i) Such sign shall be placed at the top floor;~~
~~ii) Such sign may not be placed on façades facing a property line that directly abuts a residentially zoned property; and~~
~~iii) Such sign may be internally illuminated or back lit.~~

~~(Ord. of 4-5-10)~~

~~404.5 **Light Source Regulated**. In all districts, a lighting fixture that directly or indirectly illuminates a sign, must be designed so that the light source itself is shielded from view. This does not apply to signs illuminated by neon or illuminated tube type signs.~~

~~404.6 **Highway Guide Signs**. The Westbrook Area Chamber of Commerce may erect a guide sign on each entrance to Westbrook. Each sign must be placed so as to be in view only from Routes 302, 25, 22, Spring Street, and Stroudwater Street. Maximum size shall be 10" x 20", with directions focused on general areas rather than as advertisement for specific businesses.~~

~~404.7 **Consolidated Service Club Sign**. Service clubs in the city may have a consolidated sign in any district on each of Routes 25, 302, 22, Spring Street and Stroudwater Street entering the city. Each sign must meet the following requirements:~~

~~E. Size. May not exceed a height of ten (10) feet or a width of ten (10) feet. The sign area for each individual club may not exceed ten (10) square feet.~~

~~F. Content. May contain only the name, symbol, meeting time, and meeting place of each service club.~~

~~G. Illumination. May not be internally illuminated.~~

~~404.8 **Installation of Community Event Signs**. On request, the Code Enforcement Officer (CEO) may permit a person or organization to install a banner sign across a public way under the following conditions:~~

~~E. Citywide Interest. The purpose of the banner must be to announce a function of citywide interest, including church events, concerts, fund-raisers or similar activities.~~

~~F. State and Local Law. The installation of the sign must meet all the requirements of state and local law. The person requesting the installation shall provide the CEO with a sketch showing the dimensions, method of installation, materials, and text of the sign. The CEO shall establish the dates of installation and removal.~~

~~404.9 **Variance and Nonconforming Signs**. The granting of a variance from these sign ordinance provisions is prohibited. Where a sign exists as a nonconforming sign, it shall not be extended, altered or enlarged, except that routine maintenance is permitted unless otherwise specified in Section 404. Any entity proposing a development requiring Site Plan Review shall, as a condition of any approval of such development proposal, be required by the Code Enforcement Officer to bring any signs into conformance with the provisions of this ordinance, except as follows:~~

~~1. Individually legally nonconforming signs within the Residential and City Center District. Such nonconforming signs are required to meet the standards as outlined within Section 404.~~

~~2. Individual legally nonconforming signs which are within developments seeking amended Site Plan Review approval and which will not be altered as part of the proposed project are not required to be brought into conformance with this ordinance unless the development proposal involves at least a 20% increase in the total on-site building footprint or a change in use of the property. New and altered signs in such developments shall conform to this Ordinance.~~

~~404 Reserved (Removed in entirety; Ord. of 3-3-14~~

Commentary: Add the following Definitions to Section 201 which were part of Section 404.

201 Definitions.

Commercial Message. Any wording, logo or other representation that directly or indirectly names, advertises or calls attention to a business, a primary product or service, or other commercial activity.

Nonconforming sign: Any sign that was lawful prior to the adoption, amendment, or revision of this Ordinance but that does not conform to the current requirements of this Ordinance.

Sign: Any device, fixture, placard or structure that uses any color, form, graphic, illumination, symbol or writing to advertise, announce the purpose of, or identify the purpose of a person or entity, or to communicate information of any kind to the public.

Temporary Signage: A sign that is intended to be used for a brief period of time and in compliance with the ordinance standards.

Commentary: The following changes are to code section numbers or labels and do not change any standards.

319 Elms Contract Zoning District:

K. Signage. As regulated by Section ~~404.3.1~~ 404.6 Signs in the City Center District.

320 Contract Zone 10 – Gateway West (Established 5-6-13; Amended by Ord. 2016-34 on 5-2-16)

N. Signage

(2) Other Signage. Any other signage shall comply with the requirements of Section ~~404.3.1~~ 404.6 (the provisions for signs in the City Center District) of the Land Use Ordinances.

322 Contract Zone -12 – Rock Row Contract Zone

C. Signage Standards. The Sign Regulations of Section 404 of the Ordinance apply to signage in this Rock Row Contract Zone except as modified by this Section 322.5 C.; although the underlying zoning district for the Development is Gateway Commercial, signage in the Development shall be regulated as though it is located in the City Center District, under Section ~~404 .3.1~~ 404.6 of the Ordinance except as modified herein by this Section.

1. General.

a. Traffic Safety and illumination. Section ~~404.3.1.1 B~~ 404.6. of the Ordinance notwithstanding, 1) changeable signs shall be allowed as permitted under State law and subject to Section 322.5.C.2.k of the Ordinance, and 2) there is no limitation on the hours during which illuminated signs may operate.

b. Sign Height. Section ~~404.3.1.1 G~~ 404.6. of the Ordinance notwithstanding, the topmost element of any sign may not be higher than ten (10) feet above the cornice line of any building.

c. Temporary Signs. Section ~~404.3.1.1 I~~ 404.6.C.11. of the Ordinance notwithstanding:

1) the maximum area of Real Estate Signs per lot is 144 square feet per lot or building proposed for lease, sale or rent, and such signs shall not be of a banner

construction;

2) the maximum area of a new business sign is 144 square feet and must be attached to the structure, and such signs shall not be of a banner construction; and
3) construction signage may be placed continuously along fencing on public ways that the Development fronts upon so long as such signage does not exceed a height of four feet above the abutting street or sidewalk, whichever is taller, and may be of a banner construction.

2. Sign Types Allowed.

a. Building Mounted Signs.

1) Storefront Building Mounted Sign. Section ~~404.3.1.3.A~~ 404.6.C.1. of the Ordinance notwithstanding,
   a) One Building Mounted sign per tenant on the storefront façade fronting upon a public or private way or a parking area, and for tenants of building corners, an additional sign on the other storefront façade fronting upon another public or private way or parking area, is permitted.
   b) Maximum sign area shall be at the ratio of one (1) square foot per one linear foot of tenant frontage, with a maximum sign area of 10% of the relevant façade wall area.

b. Ground Mounted Signs.
   1) Section ~~404.3.1.3.B~~ 404.6.C.2. of the Ordinance notwithstanding, one ground-mounted sign is permitted per lot

c. Blade Sign.
   1) Section ~~404.3.1.3.C~~ 404.6.C.3. of the Ordinance notwithstanding, one blade sign per tenant is permitted;

f. Entry Point Tenant Directory Sign. Section ~~404.3.1.3.D~~ 404.6.C.6. of the Ordinance notwithstanding, an Entry Point Tenant Directory Sign is permitted for occupants located on the second floor and above for each multi-story building in the Development, which sign may be built similar to a monument sign, shall have a maximum sign height of 6 feet including the base, and shall have a maximum letter height for the building/development name or logo of 8 inches, and for all other lettering, of 4 inches.

i. Canopy or Awning Sign. Section ~~404.3.1.3.H~~ 404.6.C.9. of the Ordinance notwithstanding, canopy or awning signs may include graphics and/or the tenant's logo if the tenant's storefront has no building mounted signs including but not to limited blade signs, and each such canopy or awning may have a length of up to the full length of the storefront. Proof of general liability insurance to protect the City of Westbrook is not required.

Chapter IV – Special Standards and Overlay Districts

407 Residential Growth Area 1 Business Office Overlay Zone

407.5 Performance Standards
Signs: The regulations in Section ~~404.2 Signs in Residential Districts~~ 404.4 Signs in Residential Growth Area 1, Residential Growth Area 2, Residential Growth Area 3 and Rural Districts, shall apply to all uses in Section 407.

CITY OF WESTBROOK, MAINE

IN CITY COUNCIL

Date: July 6, 2020

Order: 2020-79

AUTHORIZING EXPENDITURE FOR AGENDA MANAGEMENT SYSTEM

That the Westbrook City Council hereby authorizes the purchase of the CivicClerk agenda management system from CivicPlus of Manhattan, KS at a total cost of $8,000.

Funds available in budget line 10001400-53619

First Reading: July 6, 2020 Second and Final Reading: August 3, 2020

Attest:

City Clerk Mayor

CITY OF WESTBROOK, MAINE

2 York Street, Westbrook, ME 04092

REQUEST FOR COUNCIL ACTION

*Requests are due to the City Clerk two Fridays prior to a Council meeting. If expenditure/acceptance of funds is involved, Finance Department approval is required **prior** to submission.*

PROPOSED TITLE: Authorizing Expenditure for Agenda Management System

REQUESTED BY: Angela Holmes, City Clerk

DATE: 06/30/2020

SUMMARY:

This is a request to authorize the purchase of the CivicClerk agenda management software from CivicPlus of Manhattan, KS, at total cost of $8,000 in FY 2021. Future annual costs will be $7,200, with a 5% annual increase beginning in Year 3 of service.

CivicPlus is the City's current website provider, and CivicClerk is a module which will integrate within our existing system. This system is currently utilized by the cities of Portland and South Portland, and have highly recommended it for its functionality and time-saving capabilities for administration and departments. The Clerk's Office reviewed demos of three comparable agenda management systems, and recommends CivicClerk.

This package allows for the web-based creation of agendas, minutes and legislation through building a workflow management system for department heads and management team members. Requests for Council Action would be submitted through the online portal, and would be reviewed/approved and added to agendas by the Administration. This will allow the Clerk & City Administrator to track all key information, create tasks, to-do items and reminders, along with managing multiple versions of documents as they are edited by department heads. The system utilizes building blocks which would be customized to Westbrook's forms to pre-draft wording, formatting and commonly repeated entries, and uses agenda information to pre-draft minutes, thus expediting publication.

CivicClerk would initially be used for City Council, but the module would allow for up to 7 boards or committees to utilize the interface.

BUDGET LINES AFFECTED (IF APPLICABLE):

Funds included in FY 2021 Records Management budget. 10001400-53619 $8,000

CivicPlus
302 South 4th St. Suite 500
Manhattan, KS 66502
US

Quote #: Q-06758-1
Date: 1/15/2020 2:02 PM
Expires On: 7/31/2020
Product: CivicClerk

Ship To
Ashley Rand
Westbrook ME - CivicClerk

Bill To
Westbrook ME - CivicClerk

SALESPERSON	Phone	EMAIL	DELIVERY METHOD	PAYMENT METHOD
Levi Smith	x	lesmith@civicplus.com		Net 30

Exhibit A.1 - Statement of Work

QTY	PRODUCT NAME	DESCRIPTION	TOTAL
1.00	CivicClerk Premium Package	Premium Package - Max Number of Boards: 7	$0.00
1.00	CivicClerk- Premium Annual Fee	CivicClerk- Premium Annual Fee	$7,200.00
1.00	CivicClerk Design	CivicClerk Design	$109.59
2.00	CivicClerk Consulting (1h, virtual)	CivicClerk Consulting (per hour)	$87.67
3.00	CivicClerk Configuration	CivicClerk Configuration	$328.77
2.00	System Training (1d, virtual)	Training (Virtual) - half day, up to 4 hours	$273.97
		TOTAL:	$8,000.00

Total Days of Quote:364

One Time Costs	$800.00
Recurring Costs	$7,200.00

* Recurring Costs stated herein are based upon the number of days stated above.
Upon renewal of this SOW, the Recurring Costs will reflect a 365 day calendar year.

1. Performance and payment under this Statement of Work ("SOW") shall be subject to the terms & conditions of the Agreement by and between Client and CivicPlus, to which this SOW is hereby attached as Exhibit A.1.
2. This SOW shall remain in effect for an initial term of one year (12 months) from signing. In the event that neither party gives 60 days' notice to terminate prior to the end of the initial or any subsequent renewal term, this Agreement will automatically renew for an additional 1-year Renewal Term.
3. The Total Fees Year 1 (the sum of the One Time Costs and Recurring Costs) will be invoiced at signing of this SOW.

4. Renewal Term Annual Services (Recurring Costs) shall be invoiced on the date of signature of relevant calendar years. Annual services, including but not limited to hosting, support and maintenance services, shall be subject to a 5% annual increase beginning in Year 3 of service.
5. CivicPlus will use commercially reasonable efforts to perform the Services in a manner consistent with applicable industry standards including, maintaining Services availability 24 hours a day, 7 days a week and responding to Client's requests for support during the hours of 7:00 AM to 7:00PM CT, Monday through Friday and any critical support requests 24 hours per day, 7 days a week.
6. Client shall have sole control and responsibility over the determination of which data and information shall be included in the content that is to be transmitted to CivicPlus. Client shall not provide to CivicPlus or allow to be provided to CivicPlus any content that (a) infringes or violates any 3rd party's Intellectual Property rights, rights of publicity or rights of privacy, (b) contains any defamatory material, or (c) violates any federal, state, local, or foreign laws, regulations, or statutes.
7. The service(s) are provided on an "as is" basis, and Client's use of the service(s) is at its own risk. CivicPlus does not warrant that the service(s) will be uninterrupted or error-free or unaffected by force majeure events.
8. The Client will be invoiced electronically through email. Upon request CivicPlus will mail invoices and the Client will be charged a $5.00 convenience fee.

Acceptance

We, the undersigned, agreeing to the conditions specified in this document, understand and authorize the provision of services outlined in this Agreement.

Client	CivicPlus
By:	By:
_____	_____
Name:	Name:
_____	_____
Title:	Title:
_____	_____
Date:	Date:
_____	_____

Contact Information

*all documents must be returned: Master Service Agreement, Statement of Work, and Contact Information Sheet.

Organization URL

Street Address

Address 2

City State Postal Code

CivicPlus provides telephone support for all trained clients from 7am –7pm Central Time, Monday-Friday (excluding holidays). Emergency Support is provided on a 24/7/365 basis for representatives named by the Client. Client is responsible for ensuring CivicPlus has current updates.

Emergency Contact & Mobile Phone

Emergency Contact & Mobile Phone

Emergency Contact & Mobile Phone

Billing Contact E-Mail

Phone Ext. Fax

Billing Address

Address 2

City State Postal Code

Tax ID # Sales Tax Exempt #

Billing Terms Account Rep

Info Required on Invoice (PO or Job #)

Contract Contact Email

Phone Ext. Fax

Project Contact Email

Phone Ext. Fax

Addendum 1 to Exhibit A.1 - Project Development Division of Work

Phase 1 – Introduction and Initial Configuration

CLIENT RESPONSIBILITY	CIVICPLUS RESPONSIBILITY
• Complete the implementation questionnaire • Provide Word versions of your agendas and item reports	• Create a production site request and assign a PL request in JIRA • Reach out to Client to explain the Implementation plan • Schedule and conduct a kick-off call with Client, if requested • Once supplied Word versions of the agendas and item reports, configure the templates in the system • Input questionnaire data

Phase 2 – Initial Review

CLIENT RESPONSIBILITY	CIVICPLUS RESPONSIBILITY
• Be prepared to schedule a call for system review • Provide feedback on any needed changes	• Schedule and conduct a first look call with Client. • Provide any template changes needed to CivicPlus.

Phase 3 – Final Configuration and Review

CLIENT RESPONSIBILITY	CIVICPLUS RESPONSIBILITY
• Provide a list of users • Provide any additional feedback and changes	• Enter user list with appropriate security settings • Make necessary changes to templates and configuration

Phase 4 – Training

CLIENT RESPONSIBILITY	CIVICPLUS RESPONSIBILITY
• Schedule a presentation for administrator training • Schedule a presentation for end user training	• Schedule and conduct administrator and end user trainings

Phase 5 (As Needed) – Additional Services

CLIENT RESPONSIBILITY	CIVICPLUS RESPONSIBILITY
• Provide Word versions of your most recent minutes • Provide a list of your Board/Council members • Schedule a 30 minute call for minutes training • Schedule a 30 minute call for BoardView training	• Once supplied Word versions of the minutes, configure the templates in the system • Schedule and conduct minutes training • Schedule and conduct BoardView training

CITY OF WESTBROOK, MAINE

IN CITY COUNCIL

Date: July 6, 2020

Order: 2020-80

AUTHORIZING AMENDMENT AND ADDITIONAL EXPENDITURE FOR ENGINEERING SERVICES FOR DOWNTOWN LIGHTING

That the Westbrook City Council hereby authorizes an amendment to the agreement with Wright-Pierce Engineers of Portland, ME and further authorizes an additional expenditure of $10,000 for engineering services related to the replacement of downtown street lighting.

Funds available in budget line: 40003000-58900-C1715

First Reading: July 6, 2020 Second and Final Reading: August 3, 2020

Attest:

City Clerk Mayor

CITY OF WESTBROOK, MAINE

2 York Street, Westbrook, ME 04092

REQUEST FOR COUNCIL ACTION

*Requests are due to the City Clerk two Fridays prior to a Council meeting. If expenditure/acceptance of funds is involved, Finance Department approval is required **prior** to submission.*

PROPOSED TITLE: Authorizing Amendment for Engineering Services - Downtown Lighting

REQUESTED BY: Eric Dudley, Director of Engineering and Public Services

DATE: 06/04/2020

SUMMARY:

The Department of Engineering and Public Services requests an amendment to the agreement with Wright-Pierce Engineers of Portland, Maine in the amount of $10,000 for additional engineering services related to the replacement of downtown street lighting. The purpose of the increase in cost is due to the extensive coordination and electrical service design associated with converting the lighting from the CMP primary grid to a secondary, metered service. This work also includes modifications to the location and ownership of the underground conduits from CMP to the City.

The current lighting on Main Street and the City-owned downtown parking lots is early 1970's vintage which are expensive to operate and are nearing the end of their useful life. The proposed project will replace them with more modern lighting similar to the boardwalk, Bridge Street and William Clarke Drive.

BUDGET LINES AFFECTED (IF APPLICABLE):

40003000-58900-C1715

OK SM

CITY OF WESTBROOK, MAINE

IN CITY COUNCIL

Date: September 10, 2018

Order: 2018-125

AWARD OF BID FOR MAIN STREET LIGHTING DESIGN

That the Westbrook City Council hereby awards a bid for engineering and design services for the replacement of 88 street light poles and fixtures along Main Street and in downtown municipal parking lots, including conduit and meter stanchion design, LED fixtures and GFCI outlets, to Wright-Pierce of Portland, Maine at a cost of $25,000.

Funds available in budget line 40003000-58900-C1715.

First Reading: September 10, 2018

Second and Final Reading: September 17, 2018

Attest:

City Clerk

Mayor

CITY OF WESTBROOK, MAINE

2 York Street, Westbrook, ME 04092

REQUEST FOR COUNCIL ACTION

*Requests are due to the City Clerk two Fridays prior to a Council meeting. If expenditure/acceptance of funds is involved, Finance Department approval is required **prior** to submission.*

PROPOSED TITLE: Award of Bid for Downtown Lighting Design

REQUESTED BY: Katherine Kelley

DATE: 09/07/2018

SUMMARY:

The Department of Engineering and Public Services requests authorization to contract with Wright-Pierce of Portland in the amount of $25,000.00 for design of light poles in Downtown. Wright-Pierce was the lowest of two bidders with CES Inc. being the second. This design involves the conduit and meter stanchion design of 88 poles on Main Street, Ash Street, Church Street, Mechanic Street, Main Street Parking Lot, Mechanic Street Parking Lot, Church Street Parking Lot and Ash Street Parking Lot. The look of the poles will follow the current green light pole design that can be found on Bridge Street and William Clarke Drive. Also included in the design will be the conversion to LED to make the lights more environmentally friendly and GFCI outlets so we can decorate the poles in the winter months. This project goes together with the current effort to revitalize downtown by converting the existing lighting poles to be more cohesive with the existing poles on Bridge and William Clarke.

BUDGET LINES AFFECTED (IF APPLICABLE):

4000C1715

Downtown

Westbrook, ME

March 1, 2018

1 inch = 150 Feet

0 150 300 450

CAI Technologies

www.cai-tech.com

Data shown on this map is provided for planning and informational purposes only. The municipality and CAI Technologies are not responsible for any use for other purposes or misuse or misrepresentation of this map.

DESCRIPTION OF COMPONENTS:

TYPE B POLE: Visco #VI-WB21-OCT-21 #SP9075B
TYPE B ARMS: Hadco #SA9075A
TYPE B LUMINAIRE: Hadco #CF14 / #59075B

TYPE C POLE: Visco #VI-WB16-H1-OCT/9"
TYPE C ARMS: Hadco #SA9074A
TYPE C LUMINAIRE: Hadco #CF11 #S9075BA

LENS: Made of clear dome diffuser.

TYPE B LAMP: 250 watt, metal halide, BT 28 bulb, mogul base.
TYPE C LAMP: 150 watt, E17 bulb, medium base.

OPTICS: Precision formed, segmented specular aluminum internal cutoff reflector with horizontal lamp mounting, giving a type 3 (asymmetrical) distributions. Reflector is rotatable in 90° increments.

HOUSING: 413F, Low-Copper cast aluminum. 0.090" thick spun aluminum. Lens frame door shall be a one-piece cast aluminum frame with an integral cast hinge. Weatherproof ballast assembly shall isolate the ballast from water and heat. Decorative fluted aluminum spinning available for ballast housing. All non-ferrous fasteners prevent corrosion and ensure longer life

ARM: Made of 2" Sch 40 pipe with clamp-on collars & twist-lock photo control, see detail for size of collars.

TYPE B BALLAST: 250 watt, MH, high power factor of 90% or better, quadruple tap, 120, 208, 240, 277 volt, wired at 240V (match existing voltage),-30°F (-34°C) lamp starting capacity, c/w quick disconnect plug.
TYPE C BALLAST: 150 watt, MH, high power factor of 90% or better, quadruple tap, 120, 208, 240, 277 volt, wired at 240V (match existing voltage),-30°F (-34°C) lamp starting capacity, c/w quick disconnect plug.

POLE: 11 Gage, 8-3/4" Flat-to-Flat Galvanized Steel Octagonal tapered pole, with .014"/FT Taper, welded to the base. 38" pole extension with 3/16" Wall Steel Tubing.

TYPE B BASE COVER: WB21 27.50" - Made of a two-piece cast iron component, with Removable Access Door, giving access to a ground lug. Seal to pole with silicone sealant per manufactures' instructions.
TYPE C BASE COVER: WB16 10" - Made of a two-piece cast iron component, with Removable Access Door, giving access to a ground lug. Seal to pole with silicone sealant per manufactures' instructions.

BASE: 1" A36 Steel Plate, with 12" Bolt Circle, with (4) 1-1/4" slots.

PHOTOCELL: mount / install in top of bracket arm

WIRING: Included, from luminaire to the bracket, exceeding the latter by a minimum of 6".

GASKETING: Neoprene and/or silicone gasketing is applied.

FINISH: Shall be polyester powder coat paint over a galvanized sub-finish (RAL6005) The Fixtures thermoset polyester powdercoat shall be electrostatically applied after a five-stage conversion cleaning process and bonded by heat fusion thermosetting.

TYPE B: BANNER ARM HARDWARE: (2) 24" LG 1-1/2" SCH. 40 STEEL PIPE.

TYPE C: FLOWER BASKET BRACKET

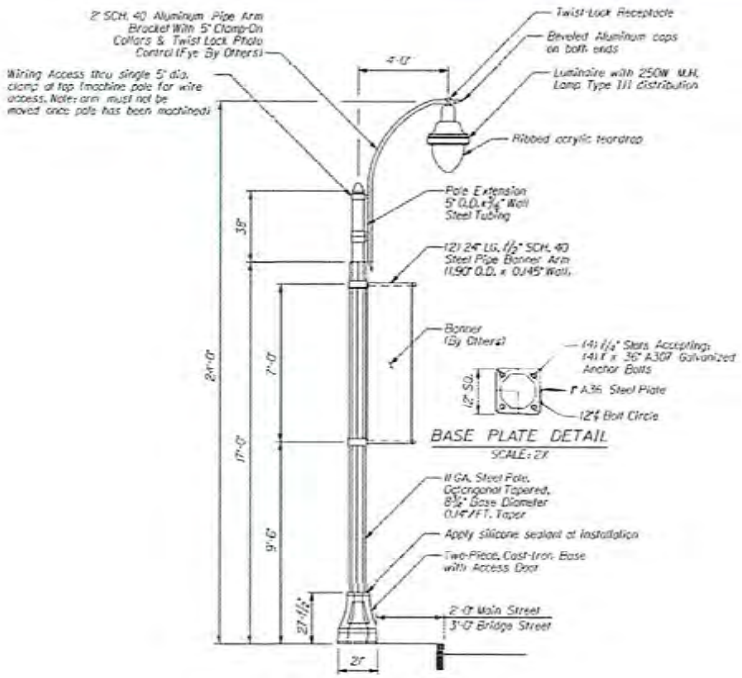

LIGHTING POLE DETAIL - TYPE B
Not To Scale

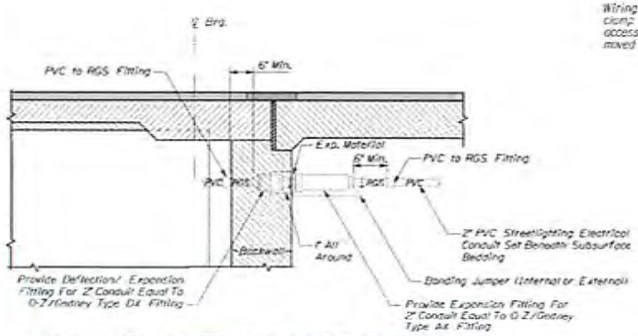

STREET LIGHTING CONDUIT AT BRIDGE TRANSITION

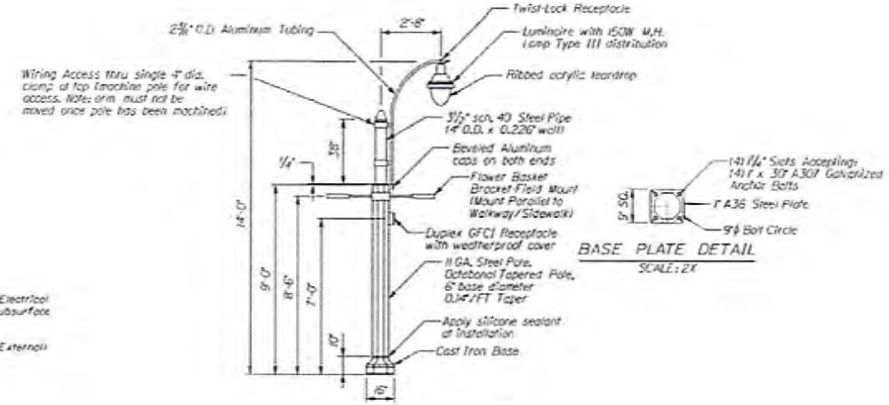

LIGHTING POLE DETAIL - TYPE C
(Type C Similar To Type B)
Not To Scale

Stantec

STATE OF MAINE
DEPARTMENT OF TRANSPORTATION
STP-1928(200)
BRIDGE NO. 5051
WIN 19282.00
BRIDGE FLARE

BRIDGE STREET BRIDGE
PRESUMPSCOT RIVER
WESTBROOK CUMBERLAND COUNTY

LIGHTING DETAILS 2

SHEET NUMBER
25
OF 74

Scope of Services

Based on our review of the Request for Qualifications, understanding of the Town's objectives, and experience with the key project issues as outlined above, we propose the following scope of services:

Task 1

- Conduct a "kick-off" meeting with The City of Westbrook to confirm project goals, constraints, and schedule, and to establish a clear means of project communications.
- Review readily available relevant project information, (prior plans, City operations and maintenance capabilities, etc.) and discuss needs for obtaining additional information with the City.
- Contact the various utility companies to apprise them of the project, identify the location of their existing facilities to the extent such information is readily available, and discuss coordination issues.
- Perform on-site survey and incorporate it with MaineDOT boundary survey plans and adjacent relevant City lighting plans from the Bridge Street project to develop existing conditions design materials in AutoCAD format.
- Provide copies of existing conditions plans in electronic PDF file for City review and comment.
- Develop 50% final design plans and construction cost estimates.
- Submit these materials to the City in electronic PDF file and attend a meeting with the City to review these draft final design materials.
- Make revisions based on City review comments and submit the draft plans to MaineDOT and appropriate utility providers for final coordination.
- Revise final design plans and construction cost estimates based on feedback from MaineDOT and the appropriate utilities.
- Develop 90% final design plans, specifications and construction cost estimates.
- Submit these materials to the City in electronic PDF file and attend a meeting with the City to review these draft materials.
- Submit final design plans, specifications and construction cost estimates to the City in electronic PDF and AutoCAD format.

Project Deliverables

All draft and final plans, specifications and cost estimate products will be provided to the City in electronic and hardcopy formats. All electronic documents will be provided Adobe Acrobat (PDF) and or AutoCAD format, with professionally stamped plans and specifications provided in PDF file for project record purposes.

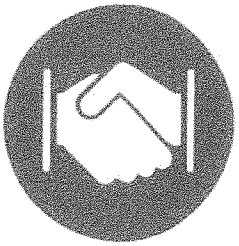

ANTICIPATED PROJECT SCHEDULE

The following is a proposed timetable to complete the project, including benchmark schedule estimates based on the above scope of services:

Task	Proposed Time
Kickoff Meeting	July 2018
Site Survey	August 2018
Utility Coordination	Ongoing through 90% Design
Ex. Cond. Submittal	August / Sept 2018
50% Design	Sept / Oct 2018
90% Design	Oct / Nov 2018
Final Design	December 2018

CITY OF WESTBROOK, MAINE

IN CITY COUNCIL

Date: July 6, 2020

Order: 2020-81

AUTHORIZING EXPENDITURE FOR POLICE DEPARTMENT TRAINING & DUTY AMMUNITION

That the Westbrook City Council hereby approves the purchase of Police Department training and duty ammunition from AAA Police Supply of Dedham, MA at a total cost of $4,810 as outlined in the attached exhibit.

Funds available in budget line 10002110-53300

First Reading: July 6, 2020 Second and Final Reading: August 3, 2020

Attest:

City Clerk Mayor

CITY OF WESTBROOK, MAINE

2 York Street, Westbrook, ME 04092

REQUEST FOR COUNCIL ACTION

*Requests are due to the City Clerk two Fridays prior to a Council meeting. If expenditure/acceptance of funds is involved, Finance Department approval is required **prior** to submission.*

PROPOSED TITLE: Purchase and expenditure authorization for PD training/duty ammunition from AAA Police Supply of Dedham, Massachusetts.

REQUESTED BY: Captain Sean Lally

DATE: 05/22/2020

SUMMARY:

This request is purchase training and duty ammunition for the department. Our annual Maine Criminal Justice Academy mandated qualifications for pistol and shotgun is schedule for June 22 through June 25, 2020. In addition, we must purchase training ammunition for our new hire officer(s) to attend the MCJA Basis Law Enforcement Training Program tentatively schedule for August 2020. Lastly, our duty ammunition is scheduled to be replaced after firearms qualifications. We replace duty ammunition on a 3 year cycle. The old duty ammunition will be used during our June training sessions. The department uses AAA Police Supply as a single source vendor for ammunition. AAA Police Supply gives us a substantial discount as part of a municipal contract negotiated by over 30 cities in towns.

BUDGET LINES AFFECTED (IF APPLICABLE):

10002110-53300 OK SMR

AAA POLICE SUPPLY

940 PROVIDENCE HIGHWAY
DEDHAM, MA 02026

P (781) 326 8845
F (781) 326 3963

QUOTE:

DATE: 05-22-2020

AGENCY:	Westbrook Police Department (ME)
ADDRESS:	
CONTACT:	Captain Sean Lally
PHONE:	
FAX:	
EMAIL:	slally@westbrook.me.us

QUANTITY		ITEM	PRICE	EXTENSION
6		Cases 3477 Ammo	$233.00	$1,398.00
3		Cases LE12700 Ammo	$126.00	$378.00
2		Cases LEB127RS Ammo	$149.00	$298.00
12		Cases 91375 Ammo	$228.00	$2,736.00

SUB TOTAL	$4,810.00
TAX	$0.00
SHIPPING	$0.00
TOTAL	$4,810.00

QUOTE BY: James Bogins

EMAIL US - AAAPOLICESUPPLY@GMAIL.COM

CITY OF WESTBROOK, MAINE

IN CITY COUNCIL

Date: July 6, 2020

Order: 2020-82

APPROVING EMERGENCY EXPENDITURE FOR POLICE DEPARTMENT PROTECTIVE GEAR

That the Westbrook City Council hereby approves an emergency expenditure for Police Department field protective gear from Witmer Public Safety Group of Coatesville, PA at a total cost of $4,665.70.

Funds available in budget line: 22002110-58900-02213

First Reading: July 6, 2020 Second and Final Reading: August 3, 2020

Attest:

City Clerk Mayor

CITY OF WESTBROOK, MAINE

2 York Street, Westbrook, ME 04092

REQUEST FOR COUNCIL ACTION

*Requests are due to the City Clerk two Fridays prior to a Council meeting. If expenditure/acceptance of funds is involved, Finance Department approval is required **prior** to submission.*

PROPOSED TITLE: Authorizing emergency expenditure for Police Department protective gear

REQUESTED BY: Captain Sean Lally

DATE: 06/24/2020

SUMMARY:

This is a request to approve an emergency expenditure for ten (10) sets of field protective gear from Witmer Public Safety Group at a total cost of $4665.70.

Westbrook officers recently received field operation training sponsored by FEMA, and having received this training they were called upon to assist the City of Portland through our mutual aid agreement. However, appropriate safety gear was not available for our officers, necessitating this emergency purchase. Funding for this purchase comes from a Department revenue line.

BUDGET LINES AFFECTED (IF APPLICABLE):

22002110-58900-02213

Invoice

Witmer Public Safety Group
104 Independence Way
Coatesville, PA 19320

Phone: (610) 857-8070
Fax: (888) 335-9800

OfficerStore

Order Number: 2035527
Po Number:
Date: June 16, 2020
Customer Id: WESPOL8
Sales Person: DONNA B
Payment Terms: Net 30 days
Ship Via: Ground
Ship Date: 6/10/2020
Order By: Capt. Sean Lally

Bill To
Westbrook Police Department
570 Main St
WESTBROOK, ME 04092

Ship To
Attn: Capt. Sean Lally
Westbrook Police Department
570 Main St
WESTBROOK, ME 04092

Line #	Product Code	Description	Quantity Ordered	Quantity Shipped	B/O	Unit Price	Extended Price
1	PB-RCS000BV00	Point Blank Advanced Crowd Control Suit One Size Fits Most, Adjustable Extremity Panels Provides Head to Toe Coverage ID Text: POLICE ID Color: WHITE	10	10		450.00	4,500.00
2	OSA-FREIGHT	Custom freight quote required; Actual shipping charges will apply	1	1			0.00

DATE: _____
ACCOUNT: _____
AUTH. BY: _____
AMOUNT: _____

Please Direct All Payment Inquiries To
Accounts Receivable
800-852-6088
Invoices@wpsginc.com Customer Signature: _____

** Net 30 days Invoices paid with a credit card will be subject to a 3% credit card processing fee **

Subtotal	4,500.00
Freight	165.70
Sales Tax	-
Total	4,665.70
Amount Paid	0.00
Balance	$4,665.70

Please return this section with payment. Your prompt payment is appreciated

Customer Name: Westbrook Police Department

Remit Payment To: Witmer Public Safety Group. Inc.
104 Independence Way
Coatesville, PA 19320

Customer Id: WESPOL8
Order Number: 2035527
Invoice Balance: $ 4,665.70
Amount Paid

TheFireStore OfficerStore theEMSstore GIDEON TACTICAL OurDesigns

CITY OF WESTBROOK, MAINE

IN CITY COUNCIL

Date: July 6, 2020

Order: 2020-83

AUTHORIZING AWARD OF BID FOR POLICE DEPARTMENT PATROL ROOM RENOVATIONS

That the Westbrook City Council hereby authorizes an award of bid to Punch Construction Services, Inc. of Waterville, ME in the total amount of $21,320 for Police Department patrol room renovations, as outlined in the attached exhibit.

Funds available in budget line: 40003000-58900-C1935

First Reading: July 6, 2020 Second and Final Reading: August 3, 2020

Attest:

City Clerk Mayor

CITY OF WESTBROOK, MAINE

2 York Street, Westbrook, ME 04092

REQUEST FOR COUNCIL ACTION

*Requests are due to the City Clerk two Fridays prior to a Council meeting. If expenditure/acceptance of funds is involved, Finance Department approval is required **prior** to submission.*

PROPOSED TITLE: Award of Bid for Police and authorize expenditure for patrol room renovation to Punch Construction Services, Inc. of Waterville, Maine.

REQUESTED BY: Captain Sean Lally

DATE: 06/17/2020

SUMMARY:

In March 2020 the Police Department solicited bids for a renovation to the police patrol room at the Public Safety Building. Two bids were submitted.

Of the two bids submitted, the lowest bid of $21,320.00 came from Punch Construction Services, Inc. of Waterville, Maine. The Police Administration has reviewed the bid and it addresses all the bid criteria. We respectfully request the council accept the bid from Punch Construction Services and authorize the expenditure for this project.

Funding for this purchase is available in the FY 2020 CIP project for equipment replacement and renovations at the Public Safety Building.

BUDGET LINES AFFECTED (IF APPLICABLE):

40003000-58900-C1935

Updates to Patrol Room and break area

1. Remove approximately three (3) feet of workplace counter as you walk into the patrol room to the right. Reinstall three-foot section at the other end of the counter under the patrol keys.
2. Reinstall counter trim
3. Remove all the molding around the patrol and break room.
4. Re-frame white board
5. Remove and re-tile the patrol room floor approximately 440 square feet.
6. ~~Install water fountain. Home Depot model - Elkay Filtered 8 GPH EZH2O ADA Stainless~~ Steel ~~Drinking Fountain with Bottle Filling Station 1,089.08. Suggested placement in hallway outside the bathroom~~.
7. Remove two white boards.
8. Install workplace counter between the two windows. Approximately 8 ½ feet in length.
9. Install power outlet towers for computers – open to suggestions. Need to change/improve current method of running power/electric cords across the floors.
10. Repair and paint walls in both rooms

Updates to Break Room

11. Remove and re-tile the break room floor approximately 168 square feet
12. Install a counter approximately 6 feet in length, with cabinets underneath and shelving above for radios with power strips and equipment.
13. Install power strips and flashlights on wall

QUOTE

PUNCH

Construction Services

COMMERCIAL
PUNCHLIST
SPECIALISTS

Renovation to Patrol Room/ Break Room

66A Summer St.
Waterville, ME 04901
207-944-1524
bill@punchconservices.com

City of Westbrook, Maine
Police Department
570 Main Street
Westbrook, Maine 04092

We are pleased to have the opportunity to quote the following services per your request:

Services	Amount
Remove/ resize, reinstall existing Patrol Room countertop, by depth and length. Balance of length reduction section to be refit for use as a copier station at the adjacent wall. Includes furnish/ install temporary countertop for equipment/ operations. Copier station refit to be permanently joined in position to refitted countertop. Includes refitted floor gusset supports.	
Remove all wall rail moldings throughout Patrol Room and dispose of.	
Remove 2 of 3ea White Boards and re-band remaining White Board	
Patch/ repaint walls at Patrol Room/ Break Room	
Remove and replace VCT floor covering with Patina -Antique Pewter -419-016, 18"x24" vinyl plank, including new cove base, at Patrol Room and Break Room.	
Furnish/ Install new Worktable w/ tiered Rear Shelf at Patrol Room window wall.	
Furnish/ Install a Power Pole with tel/ data and power outlets at existing desk locations.	
Furnish/ Install Break Room countertop w/ base shelving and oversized wall mounted cubbie compartments above.	
Furnish/ Install wood wall panel w/ edge band, including adjacent 120v power drop for power strip(s) and accessory battery charging equipment at Break Room wall.	
Final Quote	**$21,320.00**

State and Local Sales Tax are EXCLUDED from Final Costs of this project

Thank you for the opportunity to quote this project

CITY OF WESTBROOK, MAINE

IN CITY COUNCIL

Date: July 6, 2020

Order: 2020-84

AUTHORIZING REIMBURSEMENT FOR POLICE OFFICER TRAINING COSTS

That the Westbrook City Council hereby authorizes the issuance of a reimbursement in the amount of $24,000 to be issued to the Town of Old Orchard Beach, Maine to partially cover Maine Criminal Justice Academy training costs for an officer transferred to Westbrook from the Town of Old Orchard Beach Police Department, as outlined in the attached exhibit.

Funds available in budget line: 10002110-53300

First Reading: July 6, 2020 Second and Final Reading: August 3, 2020

Attest:

City Clerk Mayor

CITY OF WESTBROOK, MAINE

2 York Street, Westbrook, ME 04092

REQUEST FOR COUNCIL ACTION

*Requests are due to the City Clerk two Fridays prior to a Council meeting. If expenditure/acceptance of funds is involved, Finance Department approval is required **prior** to submission.*

PROPOSED TITLE: Reimbursement of $24,000.00 to the Town of Old Orchard Beach for officer training costs.

REQUESTED BY: Captain Sean Lally

DATE: 02/06/2020

SUMMARY:

This authorizes payment of $24,000.00 to the Old Orchard Beach Police Department to cover Westbrook's pro-rated share of the Maine Criminal Justice Academy training for a police officer recently hired by the Westbrook Police Department. Due to the high cost of this mandatory training for new police officers, the MCJA has implemented a cost sharing procedure between departments when an officer is sent to the Academy by one department but goes to another police department within five years of graduating from the Academy training program. The officer comes to us with just over 1 year experience at OOB PD. Had this officer come to us untrained, we would have incurred the full cost of that training. This is a fair and equitable cost sharing arrangement between the departments for recent MCJA graduates.

BUDGET LINES AFFECTED (IF APPLICABLE):

10002110-~~51100~~ 53300

OK SMK

CITY OF WESTBROOK, MAINE

IN CITY COUNCIL

Date: July 27, 2020

Order: 2020-85

AUTHORIZING WESTBROOK ENVIRONMENTAL IMPROVEMENT CORPORATION (WEIC) EXPENDITURE FOR DUE DILIGENCE SERVICES AT MECHANIC STREET PARKING LOT

That the Westbrook City Council hereby authorizes a Westbrook Environmental Improvement Corporation (WEIC) expenditure in an amount not to exceed $57,200 for due diligence services related to the Mechanic Street Parking Lot as outlined in the attached exhibit; and further authorizes the Mayor or his designee to enter into agreements with S.W. Cole, Inc. of Gray, Maine, and Owen Haskell, Inc. of Falmouth, Maine to perform survey, environmental site assessments and geotechnical/geophysical investigations.

Funds available in budget line 22001390-59400-02299.

First Reading: July 27, 2020 Second and Final Reading: August 3, 2020

Attest:

City Clerk Mayor

CITY OF WESTBROOK, MAINE

2 York Street, Westbrook, ME 04092

REQUEST FOR COUNCIL ACTION

*Requests are due to the City Clerk two Fridays prior to a Council meeting. If expenditure/acceptance of funds is involved, Finance Department approval is required **prior** to submission.*

PROPOSED TITLE: Authorizing Westbrook Environmental Corporation Expenditure for due diligence funding for the Mechanic Street Parking Lot/ Vertical Harvest

REQUESTED BY: Daniel Stevenson

DATE: 07/16/2020

SUMMARY:

This is a request to authorize WEIC funding to begin due diligence work on a City-owned parcel, as outlined in the attached meeting minutes.

This was approved by WEIC on July 15, 2020.

BUDGET LINES AFFECTED (IF APPLICABLE):

22001390-59400-02299 OK SMR

Westbrook, Maine
ECONOMIC DEVELOPMENT

Daniel Stevenson
Economic Development Director
2 York Street
Westbrook, Maine 04092
Phone: 207-591-8101

TO:	Westbrook Environmental Improvement Corporation
FROM:	Daniel Stevenson, Director of Economic Development Robyn Saunders, Project Manager
CC:	Greg Day, TDB | Vertical Harvest
DATE:	July 8, 2020
RE:	Mechanic Street Parking Lot Vertical Harvest Project

PROJECT OVERVIEW

The Mechanic Street parcel (Map 032, Lot 007) includes a paved parking lot (approximately 130' x 440' or 57,400 sq. feet) with 150+ parking spaces surrounded by landscaped islands/areas. TDB LLC's Vertical Harvest Project is proposing, jointly with the City, two connected, multi-level structures:

- a 4-story parking garage (City-owned, privately-operated with 437 parking spaces); and
- a 4-story vertical grow business with 2-story residential housing atop the parking garage.

REQUEST FOR DUE DILIGENCE FUNDING

To begin due diligence on this City-owned parcel, we are requesting from WEIC a total of $57,200, which includes the following costs per task. Additional detail on each Due Diligence Task is provided in the respective Sections listed below.

Section	Due Diligence Task	Rationale	Cost
A	Survey in accordance with ALTA/NSPS standards	Due to complexity of site (history of improvements, mitigate risks, etc.)	$6,500
B	Phase I Environmental Site Assessment (ASTM standards)	To document the current + historical uses, and assess potential for contamination	$4,000
C	Geotechnical + Geophysical Investigation	Due to subsurface uncertainties (presence of clay, bedrock, fill), and assess properties for foundation design/engineering	$21,000
D	Utility Locator Company	To provide DigSafe clearance, and additional clarity of underground utilities	$700
E	Project Management	To provide 200 hours to coordinate contractors, oversee due diligence work, participate in discussions with Developer's Team, support Director of Economic Dev't.	$15,000
F	Contingency	Due to current uncertainty at the site	$10,000
		(NOT TO EXCEED) GRAND TOTAL	**$57,200**

A. **ABOUT ALTA SURVEY**

Typical surveys provide clarity on boundaries and easements. An American Land Title Association (ALTA) survey is conducted in accordance with very specific requirements set forth by both ALTA and the National Society of Professional Surveyors (NSPS). In addition to boundaries and easements, an ALTA survey is intended to mitigate risk associated with complex real estate transactions by including:

- Easements, ROWs, and other encumbrances
- Encroachments or improvements on other properties (e.g., intrusions on parcel of interest, etc.)
- Evidence of cemeteries
- Flood zones and water boundaries
- Legal routes to access the property
- Zoning setbacks

B. **ABOUT PHASE I ESA**

Environmental Site Assessments allow sufficient information to be gathered to assess potential contamination liabilities using established ASTM standards by an independent professional. Usually required by the lender or financier for a project, this will be a desktop survey with a written report prepared for the City by S.W. Cole Engineering, Inc. Both this report and the geotechnical reports described below will be critical tools to design an effective parking garage and/or attract development to this important area, regardless of the final developer or additional uses at the site.

C. **ABOUT GEOTECHNICAL + GEOPHYSICAL INVESTIGATION**

Supervised by S.W. Cole's geotechnical engineer(s), the preliminary geotechnical investigation will include:

- 2 days of drilling to install 4 test borings on City-owned property to evaluate foundation types suitable for the property.
- 2 of the borings will be converted to monitoring wells to assess groundwater levels and assist in the environmental assessment.
- Geotechnical laboratory testing will be completed on soil samples to assess the engineering properties of subsurface materials at the site.
- Screening of soil samples and spoils from the drilling to detect presence of contamination.

As part of the geophysical analysis at the site, S.W. Cole will use a specialty subcontractor to profile the bedrock at the site using geophysical shear wave velocity testing. This type of analysis is critical for any proposed large-scale development at the site, considering the uncontrolled fill, glacio-marine deposits and sand layers overlying bedrock in this area.

D. **ABOUT UTILITY LOCATOR**

Like the specialty geophysical contractor, S.W. Cole will subcontract this work. They will arrange to have a private utility locator company satisfy DigSafe requirements and ensure that all utilities (public + private) are located before any ground disturbing activity is conducted (e.g., test borings). This information can be cross-checked with the ALTA survey to ensure that an accurate inventory of utilities is prepared for the site.

E. **ABOUT PROJECT MANAGEMENT**

The City recently hired Robyn Saunders, a contracted employee, to provide project management on a number of City-owned projects that are being constructed in the coming 12-24 months. She is a graduate of the University of Maine's Department of Civil + Environmental Engineering and comes to the City with 20+ years of engineering experience ranging from due diligence (Phase I and II ESAs, geotechnical investigations, transaction screenings, etc.), permitting and remediation (VRAP, Brownfield redevelopment, active and passive contamination processes, etc.) to regulatory compliance and construction oversight.

F. **CONTINGENCY**

A $10,000 contingency is recommended at this time to account for the current level of uncertainty at the site, relative to:

- **Engineering properties of the soil and bedrock at the site.** Additional test borings, geoprobes, or geotechnical laboratory testing may be needed to sufficiently characterize the subsurface environment.
- **Environmental condition of the site.** Additional test borings, monitoring wells, test pits, laboratory testing or field screening measures may be needed to characterize or delineate any potential contamination.
- **Phase II ESA.** Additional desktop analysis, interviews, soil and water sampling/laboratory testing may be needed to properly investigate any potential Recognized Environmental Conditions (RECs) identified as part of the Phase I ESA.

CITY OF WESTBROOK, MAINE

IN CITY COUNCIL

Date: July 27, 2020

Order: 2020-86

AUTHORIZING COMMUNITY POLICING SUB-STATION RENT PAYMENTS

That the Westbrook City Council hereby authorizes an expenditure in the total amount of $18,000 to HRM Properties, LLC for rent payments for the Community Policing Sub-Station located at 192 Brown Street, Apartment 1, for the months of July 2020 – June 2021.

Funds available in budget line 22002110-58900-02213.

First Reading: July 27, 2020 Second and Final Reading: August 3, 2020

Attest:

City Clerk Mayor

CITY OF WESTBROOK, MAINE

2 York Street, Westbrook, ME 04092

REQUEST FOR COUNCIL ACTION

*Requests are due to the City Clerk two Fridays prior to a Council meeting. If expenditure/acceptance of funds is involved, Finance Department approval is required **prior** to submission.*

PROPOSED TITLE: Community Policing rent expense -192 Brown St. Apt. 1 FY21

REQUESTED BY: Chief Roberts

DATE: 07/08/2020

SUMMARY:

Requesting approval for Community Policing rent payments to HRM properties for FY 21.

The monthly rent of $1500.00 to be paid from from the Cruiser fee misc expense account for twelve months totaling $18000.00.

BUDGET LINES AFFECTED (IF APPLICABLE):

Expense 22002110-58900-02213

CITY OF WESTBROOK, MAINE

IN CITY COUNCIL

Date: July 27, 2020

Order: 2020-87

AUTHORIZING SACO/EISENHOWER STREET INTERSECTION MPI AGREEMENT

That the Westbrook City Council hereby authorizes the Mayor or his designee to enter into a Municipal Partnership Initiative Program Agreement with the Maine Department of Transportation for the Saco/Eisenhower Intersection Project and further authorizes an expenditure of up to $350,000 for the municipal share of said project as outlined in the attached exhibit.

Funds available in budget line 44001000-58900-04408

First Reading: July 27, 2020 Second and Final Reading: August 3, 2020

Attest:

City Clerk Mayor

CITY OF WESTBROOK, MAINE

2 York Street, Westbrook, ME 04092

REQUEST FOR COUNCIL ACTION

*Requests are due to the City Clerk two Fridays prior to a Council meeting. If expenditure/acceptance of funds is involved, Finance Department approval is required **prior** to submission.*

PROPOSED TITLE: Authorization for MDOT MPI agreement for the intersection improvements at Eisenhower/Saco Street & Funding appropriation

REQUESTED BY: Jennie Franceschi

DATE: 07/11/2020

SUMMARY:

See attached Memo

Authorization for MDOT MPI Funding Agreement, and construction funding appropriations in the amount of $350,000.

BUDGET LINES AFFECTED (IF APPLICABLE):

Eisenhower Dr. 44001000-58900-04408

Westbrook, Maine
PLANNING & CODE ENFORCEMENT

Planning & Code Enforcement
2 York Street
Westbrook, Maine 04092
Phone: 207-854-0638
Fax: 866-559-0642

PLANNING STAFF MEMO

DATE: July 11, 2020

TO: City Administrator, City Clerk
FROM: Jennie Franceschi, City Planner & Rebecca Spitella, Asst. Planner
Cc: Mayor, City Council

RE: Maine Department of Transportation - Municipal Partnership Initiative Program
Saco/Eisenhower Intersection Project - WIN 024317.15
Request for City Council authorization of MPI agreement & funding appropriation

---

The City, IDEXX and Abbott Laboratories are partnering with MDOT on an application request for funding of transportation improvements for the area in the vicinity of Eisenhower Drive associated with both the IDEXX and the Abbott Laboratories expansion projects. The funding mechanism is called the Municipal Partnership Initiative Program which the City has utilized for many transportation improvements.

As the program is a State/Municipal program, MDOT has awarded the funding to the City of Westbrook, with the remaining funds of the local match coming from the business partners, IDEXX & Abbott Laboratories. The improvements have a total estimated project budget of $1.269 Million Dollars. MDOT is participating in this project cost up to $500,000. The Business Partners/Municipal share is approximately $769,000.

Of the Business Partner/Municipal Share, the City of Westbrook is only participating in the signalization project of Eisenhower Drive at Saco Street up to a maximum match of $333,333 plus easement acquisition costs. The remaining local match funds will be the responsibility of the private businesses. Improvements at the intersection of Eisenhower Dr. at Saco St has been a long overdue project for the City. In partnership with IDEXX, Abbott Laboratories and MDOT, the City was afforded this great opportunity to tap into this funding mechanism to finally address an intersection that now meets the threshold for a traffic signal.

Abbott Laboratories will be responsible for all procurement, design, and construction implementation efforts. Therefore, once a sufficient amount of work is completed, the City can request reimbursement from MDOT to provide to Abbott Laboratories towards expended project costs. Work on this project can start no earlier than 2021.

In closing, Staff is requesting from the City Council the following:

1) Authorization of the administration to enter into agreement with MDOT for the attached Municipal Partnership Initiative Program for MDOT WIN 24317.15.
2) Appropriation of specified funds for the construction efforts at the Saco/Eisenhower Intersection in the amount of $350,000 to afford:
    a. $333,333 for reimbursement to the design/construction efforts and
    b. $16,667 for potential construction easements to be determined in the design efforts.

Internal Use Only
TEDOCS #: _____
CTM#: _____
CSN#: _____

STATE OF MAINE DEPARTMENT OF TRANSPORTATION
MUNICIPAL PARTNERSHIP AGREEMENT

WIN 24317.15

REGARDING

SACO STREET AND EISENHOWER DRIVE

This Cooperative Agreement (AGREEMENT) is entered into by and between the MAINE DEPARTMENT OF TRANSPORTATION ("MaineDOT")**,** an agency of state government with its principal administrative offices located on Child Street, Augusta, Maine, and the **CITY OF WESTBROOK** ("MUNICIPALITY"), a municipality in the State of Maine with offices located at **200 Main Street, Westbrook** , ME**.**

WHEREAS,
The City of Westbrook shall perform **Intersection improvements with signal** (the "Project"). **The City of Westbrook** estimates this project at $**1,269,000.00.**

The City of Westbrook SHALL:

A. Procure all contracts for and oversee the Project on **Eisenhower Drive** for the Work outlined above.

B. Cause such Work to be performed in accordance with a design by an engineer licensed in the State of Maine. The Licensed Engineer shall provide a certification to the Municipality and to MaineDOT that, in his/her professional opinion, the Project as designed will provide a smooth ride, not reduce the safety, mobility or structural quality of the state [state aid] road. All design documents must be stamped and signed in accordance with this provision by the Professional Engineer.

C. Agree to secure all necessary Federal, State and Local permits necessary to complete the work. **The City of Westbrook** also agrees to secure any needed property rights in accordance with all applicable State and Federal Law.

D. Agrees that any exceptions to State Design Standards shall be documented as part of this process. This documentation shall compare the new design to the existing conditions for each of the exceptions to current design standards. Any such exceptions shall be displayed on the cover sheet for the Project plans with the signature and PE stamp of the engineer responsible for the design of the Project.

E. Be responsible, within the Project limits, for the following:

a. Ensuring that the safety of the corridor and the life of the resulting structural and design elements are equal to or better than existing conditions and design;

b. Ensuring that the structures, roadways and/or design features affected by the Project work shall, at a minimum, be of improved quality in terms of materials and utility;

c. Ensuring that the Project does not introduce safety hazards;

d. Ensuring that the Project retains the same level of mobility or improves mobility of travel within the corridor, unless approved traffic calming measures are proposed;

e. Ensuring that the Project does not decrease the life expectancy of this component of Maine's transportation system; and,

f. Ensuring that the Project meets the current standards of Americans with Disabilities Act of 1990 (ADA) design requirements.

F. Provide certification through their Engineer to MaineDOT that the Project is complete and was constructed as designed.

G. Ensure that construction shall commence within EIGHTEEN (18) months and shall be certified complete within THIRTY-SIX (36) months of execution of this agreement. **The City of Westbrook** may forfeit the unpaid balance of this grant if these deadlines are not met or they can not demonstrate earnest and good faith efforts to meet them.

H. Be responsible for or cause its contractors to be responsible for all damage to public or private property of any kind resulting from any act, omission, neglect or misconduct of **The City of Westbrook** or its contractors, including damage to vehicles passing through the Project limits.

I. Bear all risk of loss relating to the Project and the Work regardless of cause.

MAINEDOT SHALL:

A. **Provide a maximum $500,000.00 in State funds supporting the Work stated above.** Reimbursement will be made by the Department at a minimum of 1/3 project completion upon receipt of supporting cost documentation from the Municipality. Payments will be made per Appendix A attached. The Department's Region Engineer shall review the costs and certify their eligibility prior to reimbursement of Municipal Partnership Initiative Funds. Payment by MaineDOT Municipal Partnership Initiative funds will provide up to 50% of the actual costs incurred and paid by the Municipality up to a maximum not to exceed amount of **$500,000.00**.

B. **This project has been approved for Calendar Year 2021.** If the **Municipality** commences construction of the project as outlined above prior to January 1, **2021**, the Municipality assumes the risk and responsibility for costs incurred, in the event that funding levels fall below MaineDOT projections. If this occurs, the Municipality will not receive reimbursement from MaineDOT.

The **City of Westbrook** and MaineDOT agree to function within all applicable laws, statutes, regulations, and AGREEMENT provisions; avoid hindering each other's performance; fulfill all obligations diligently; and cooperate in achievement of the intent of this AGREEMENT.

IN WITNESS, WHEREOF, the parties hereto have executed this AGREEMENT effective on the day and date last signed.

CITY OF WESTBROOK

Dated: _____ By: _____

Jerre Bryant
City Manager

STATE OF MAINE
DEPARTMENT OF TRANSPORTATION

Dated: _____ By: _____

Bruce A. Van Note
Commissioner

APPENDIX A
PROJECT SCOPE AND COST SHARING
MAINE DEPARTMENT OF TRANSPORTATION

Municipal Partnership Initiative Project

MUNICIPALITY OF WESTBROOK

PROPOSED IMPROVEMENTS TO: Saco Street and Eisenhower Drive

STATE PROJECT IDENTIFICATION NUMBER (WIN) 024317.15

FUNDED CONSTRUCTION YEAR **2021**

Project Scope: Intersection improvements with signal

Funding Outline: The Total Project Estimated Cost is **$1,269,000.00** and the Parties agree to share costs through all stages of the Project under the terms outlined below.

Work Element	Municipal Share		State Share		Total Cost
	%	$	%	$	$
Project Costs	Remaining	$769,000.00	up to 50%	$500,000.00	$1,269,000.00
PROJECT SHARES		$769,000.00	Max	$500,000.00	$1,269,000.00
Total Cost of Additional Work above agreement estimate	100%				
TOTAL ESTIMATED MUNICIPAL REIMBURSEMENT		**$500,000.00**			

Revised 01/24/2020

REIMBURSEMENT SCHEDULE:

Upon 1/3 project completion the municipality may begin invoicing the Department. Preferred invoicing interval is 1/3, 2/3, final, the Department will accept monthly invoices after 1/3 project completion with a maximum invoice submittal not to exceed 5 invoices.

DESIGN EXCEPTIONS REQUIRED: __ **YES** X **NO**

Design exceptions where required for this project. Please see attached approval from MaineDOT Chief Engineer outlining design exceptions.

CITY OF WESTBROOK, MAINE

IN CITY COUNCIL

Date: July 27, 2020

Order: 2020-88

AUTHORIZING EISENHOWER/SPRING STREET MDOT BPI INTERSECTION PROJECT CONSTRUCTION/PERPETUAL EASEMENT COMPENSATION

That the Westbrook City Council hereby authorizes an expenditure in the amount of $5,400 to Lighthouse Christian Church for compensation of the easements required by the Eisenhower/Spring Street MDOT BPI Intersection Project, as outlined in the attached exhibit.

Funds available in budget line 44001000-58900-04408

First Reading: July 27, 2020 Second and Final Reading: August 3, 2020

Attest:

City Clerk Mayor

CITY OF WESTBROOK, MAINE

2 York Street, Westbrook, ME 04092

REQUEST FOR COUNCIL ACTION

*Requests are due to the City Clerk two Fridays prior to a Council meeting. If expenditure/acceptance of funds is involved, Finance Department approval is required **prior** to submission.*

PROPOSED TITLE: Eisenhower/Spring Street MDOT BPI Intersection Project - Construction/Perpetual Easement Compensation

REQUESTED BY: Jennie Franceschi

DATE: 07/11/2020

SUMMARY:

As part of the Eisenhower/Spring Street MDOT BPI Intersection Project, the City was charged with acquisition of any easements necessary to conduct the improvements. The Lighthouse Christian Church is within the project limits and the project design requires permanent grading easement, drainage easements and temporary construction easements to facilitate the intersection project all along its property on Spring St.

The compensation for the easements was determined to be $5,400 and was accepted by the Church to provide the necessary easements associated with the project.

The easement package for all necessary MDOT projects will be brought forward at the August 3, 2020 meeting for the Council to authorize acceptance of those easements.

Therefore, staff is requesting City Council authorize the dispersement of funds in the amount of $5,400 to the Lighthouse Christian Church for compensation of the easements required by the Eisenhower/Spring Street MDOT BPI Intersection Project.

BUDGET LINES AFFECTED (IF APPLICABLE):

Eisenhower Dr. IDEXX 44001000-58900-04408 OK SM

CITY OF WESTBROOK, MAINE

IN CITY COUNCIL

Date: July 27, 2020

Order: 2020-89

AUTHORIZING SECOND & FINAL PAYMENT FOR SIMULCAST TRANSMITTER/RECEIVER SITE & AMENDING ANNUAL VENDOR LIST

That the Westbrook City Council hereby authorizes an expenditure in the amount of $14,940.32 to Radio Communications Mgmt, Inc. of Portland, ME for the second and final payment for a simulcast transmitter/receiver site, as outlined in the attached exhibit; and further authorizes an amendment to Order 2020-73 adopted on July 6, 2020, entitled *Approving the FY 2020-2021 General Fund, Recreation Fund & Parking Garage Fund Annual Vendor Lists* to include the following item:

General Fund Vendor List

Account Number	Account Name	Vendor
57340	Hardware – New	Radio Communications Mgmt, Inc.

Funds available in budget line 10001530-57340.

First Reading: July 27, 2020 Second and Final Reading: August 3, 2020

Attest:

City Clerk Mayor

CITY OF WESTBROOK, MAINE

2 York Street, Westbrook, ME 04092

REQUEST FOR COUNCIL ACTION

*Requests are due to the City Clerk two Fridays prior to a Council meeting. If expenditure/acceptance of funds is involved, Finance Department approval is required **prior** to submission.*

PROPOSED TITLE: Authorizing Second & Final Payment for Radio Equipment

REQUESTED BY: City Administration

DATE: 07/22/2020

SUMMARY:

City Council adopted Order 2020-41 on May 4, 2020, entitled *Authorizing Purchase of Radio Equipment* (attached for reference). This order authorized the purchase of a base radio, a portable radio and eight encryption keys, and authorized the purchase and payment of one-half of the total cost of an additional simulcast transmitter/receiver site, with the note that the second half of the payment (a remainder of $14,940.32) would be billed as of July 1, 2020, the start of FY 2021.

This is a request to authorize the second and final payment for the simulcast transmitter/receiver site at a cost of $14,940.32.

BUDGET LINES AFFECTED (IF APPLICABLE):

10001530 57340

OK SMM

CITY OF WESTBROOK, MAINE

2 York Street, Westbrook, ME 04092

REQUEST FOR COUNCIL ACTION

Requests are due to the City Clerk two Fridays prior to a Council meeting. If expenditure/acceptance of funds is involved, Finance Department approval is required prior to submission.

PROPOSED TITLE: Request for purchase of radio equipment

REQUESTED BY: Gregory Hamilton

DATE: 03/06/2020

SUMMARY:

The attached invoices represent purchases needed to enhance and improve the capabilities of the City's digital radio system. Specifically, one half the cost of an added simulcast transmitter/receiver site for the Public Safety Building ($14,940.32), one base radio ($1,626.95), one portable radio and 8 encryption keys ($1,222.80) The total expenditure request is $17,790.07.

An in building portable radio coverage deficiency was identified in the area specifically around the Public Safety Building and surrounding locations. The addition of this site has mitigated that problem. The total cost of the simulcast site is $29,880.64. One half the cost of the additional site as well as the other purchases listed here will come from the current year's radio antenna account. The second half of the additional site ($14,940.32) will be billed July 1 and has been budgeted for in the IT budget new hardware line.

BUDGET LINES AFFECTED (IF APPLICABLE):

21002150 59000 02124

CITY OF WESTBROOK, MAINE

IN CITY COUNCIL

Date: April 6, 2020

Order: 2020-41

AUTHORIZING PURCHASE OF RADIO EQUIPMENT

That the Westbrook City Council hereby authorizes an expenditure in the total amount of $17,790.07 to Radio Communications Mgmt, Inc. of Portland, ME for 50% of the cost of a simulcast transmitter/receiver site for the Public Safety Building, one base radio, one portable radio and an encryption key to enhance the City of Westbrook's digital radio system, as outlined in the attached exhibit.

Funds available in budget line 21002150-59000-02124.

First Reading: April 6, 2020

Second and Final Reading: May 4, 2020

Attest:

City Clerk

Mayor

RADIO COMMUNICATIONS MGMT, INC
158 RAND ROAD
PORTLAND, ME 04102

Invoice

Invoice Number
85518

Invoice Date
Jul 1, 2020

Page
1

Voice: 207-797-7503
Fax: 207-878-3521

Sold To:

WESTBROOK POLICE DEPT
570 MAIN STREET
WESTBROOK, ME 04092

Ship to

WESTBROOK POLICE DEPARTMENT
570 MAIN STREET
WESTBROOK, ME 04092

Customer ID	Customer PO	Payment Terms	
WESTBROOK POLICE DEP	Add PSB Site	Net 30 Days	
Sales Rep ID	**Shipping Method**	**Ship Date**	**Due Date**
SCOTT	BEST		7/31/20

Quantity	Item	Description	Unit Price	Extension
	Split between FY20 + FY21 Greg Hamilton C/O 2020.41	Add simulcast transmitter and voter receiver site at Public Safety Building for Police and Fire Primary channels. Invoice 50% in January 2020 Invoice remaining 50% July 1, 2020		
1.00	TITLE FY21	SER# 00306591 - Fire SER# 00307748 - Police 50% payment July 1, 2020 C/O 2020.41 DATE: 7.7.2020 ACCOUNT: 1000 18 36 - 57340 AUTH. BY: AMOUNT: 14,940.31	14,940.31	14,940.31 IT New Hardware

Subtotal	14,940.31
Service Provider / Sales T	
Total Invoice Amou	14,940.31
TOTAL	14,940.31

Check No

2020-41 This authorizes purchase of radio equipment from Radio communications, Inc. of Portland to add a simulcast/receiver site at the Public Safety Building, 570 Main Street, at a total cost of $29,880.64. This will eliminate a 'dead spot' in the new digital emergency communications system, which is necessary for all public safety responders to have full emergency communications capabilities. This installation is being performed by the same vendor that installed the full system for the city. Funding for this purchase is split 50/50 between the current FY20 and next year's FY21 budgets. This purchase is supported by the administration and is in order for first reading.

CITY OF WESTBROOK, MAINE

IN CITY COUNCIL

Date: June 27, 2020

Order: 2020-90

APPROVING A UTILITY EASEMENT AT 5 BRADLEY DRIVE (5 BRADLEY DRIVE WESTBROOK, LLC)

That the Westbrook City Council hereby authorizes the grant of a utility easement to 5 Bradley Drive Westbrook, LLC in the form attached to this Order.

First Reading: July 27, 2020 Second and Final Reading: August 3, 2020

Attest:

City Clerk Mayor

EASEMENT AGREEMENT

THIS EASEMENT AGREEMENT ("**Agreement**") is made as of the ____ day of _____, 2020, from the CITY OF WESTBROOK, a Maine municipal corporation, with a mailing address of 2 York Street, Westbrook, ME 04092 ("**Grantor**") to 5 BRADLEY DRIVE WESTBROOK, LLC, a Maine limited liability company, with a mailing address of 30 Speen Street, Framingham, MA 01701 ("**Grantee**").

RECITALS:

A) Grantor is the owner of a certain parcel of land in the City of Westbrook, Cumberland County, Maine, as described in a deed to Grantor from Greater Portland Building Fund, dated September 23, 1987, and recorded in the Cumberland County Registry of Deeds in Book 7984, Page 344 (the "**Premises**").

B) Grantee is the owner of a certain parcel of land in the City of Westbrook, Cumberland County, Maine, as described in a deed to Grantee from Maine Olympia Properties, LLC, dated May 7, 2020, and recorded in the Cumberland County Registry of Deeds in Book 36674, Page 250 (the "**Grantee Property**").

C) Grantor wishes to grant, and Grantee wishes to receive, an easement affecting a portion of the Premises, which portion is more particularly shown as "AREA OF EASEMENT" in the sketch plan attached hereto as Exhibit A (the "**Easement Premises**").

NOW, THEREFORE, for and in consideration of the easements and covenants contained herein, the sufficiency of which are hereby acknowledged, the following grant is made subject to the terms hereof:

1. Grant of Easement. Grantor hereby grants to Grantee, its successors, assigns, tenants, contractors, employees and/or agents (the "**Grantee Parties**"), with warranty covenants, a perpetual, non-exclusive right and easement (the "**Easement**") (i) to lay, construct, reconstruct, operate, maintain, replace, relocate and remove an underground fiber optic transmission system (the "**System**") within the Easement Premises consisting of underground cables, pipes, conduits, manholes, handholes and such surface testing terminals, pedestals, repeaters, markers and other appurtenances as may be reasonably necessary to activate and operate the System, (ii) to install and relocate a pole and guy wire, shown as "UP #2.04 W/ GUY" on Exhibit A (the "**New Pole**"), within the Easement Premises and run the necessary cable and wires (the "**Transmission System**") from an existing meter on an existing pole, shown as "UP #2.03" on Exhibit A (the "**Existing Pole**"), to the Grantee Property for the transmission of electricity over and across such Easement Premises, (iii) to cut and remove all trees and to clear and keep clear said Easement Premises of all trees, timber, and bushes growing on said Easement Premises by such means as the Grantee Parties may deem necessary, and the right to restrict the construction of buildings or other structures within the Easement Premises or within fifteen (15) feet of the Easement Premises, except for any drainage structures that may be required to facilitate the existing use of the area by the Grantor for drainage purposes, which drainage structures shall be located and installed in a mutually agreeable location and shall not adversely affect Grantee's other rights set

forth in this Agreement, and (iv) to enter upon the Premises for any reason incident to this Agreement.

2. Grantee's Obligations. Grantee shall, or shall cause the Grantee Parties to, at all times keep and maintain the System, the Transmission System, the Pole, the existing meter, and the Existing Pole in good repair and in a thoroughly safe and sound condition. Whenever the Grantee Parties shall enter the Premises to perform any construction, repair, replacement or maintenance work within the Easement Premises, the Grantee shall, or shall cause the Grantee Parties to, perform and complete such work diligently and as expeditiously as possible so as to minimize interference with Grantor's use of the surface of the Easement Premises. In particular, Grantee shall, or shall cause the Grantee Parties to, maintain any manholes and manhole covers, in a safe condition, landscaping around and over such areas where necessary to maintain the area in a manner consistent with the maintenance by Grantor of the area surrounding such manholes and covers. Grantee shall, or shall cause the Grantee Parties to, comply with and conform to all applicable laws relating to the construction, repair, replacement, maintenance and operation of the System, the Transmission System, the Pole, the existing meter, and the Existing Pole.

3. Grantor's Use of Easement Premises. Grantor reserves the right to use the Easement Premises for all other purposes which do not interfere with the Easement herein granted.

4. Successors and Assigns. All provisions of this Agreement, including the benefits and burdens, shall run with the land and shall be binding upon and inure to the benefit of the heirs, assigns, successors, tenants and personal representatives of Grantor and Grantee respectively.

[Signature Pages Follow]

IN WITNESS WHEREOF, Grantor and Grantee have executed this Agreement as of the day and year first above written.

Grantor:

CITY OF WESTBROOK

By:_____
Michael Foley, Mayor

STATE OF MAINE
COUNTY OF CUMBERLAND, ss. _____, 2020

Personally appeared before me Michael Foley, in his capacity as Mayor of the City of Westbrook, and acknowledged the foregoing to be his free act and deed in his said capacity and the free act and deed of said City of Westbrook.

_____
Notary Public/Attorney at Law

My commission expires:

Grantee:

5 BRADLEY DRIVE WESTBROOK, LLC

By:_____
Name: _____
Title: _____

COMMONWEALTH OF MASSACHUSETTS
COUNTY OF _____, ss

On this _____ day of _____, 2020, before me, the undersigned Notary Public, personally appeared _____, _____ of 5 Bradley Drive Westbrook, LLC, proved to me by satisfactory evidence of identification, which were _____, to be the person whose name is signed on the preceding or attached document, and acknowledged to me that he signed it voluntarily for its stated purpose, as _____, _____ of 5 Bradley Drive Westbrook, LLC.

_____
Notary Public
My commission expires:

EXHIBIT A

Easement Premises

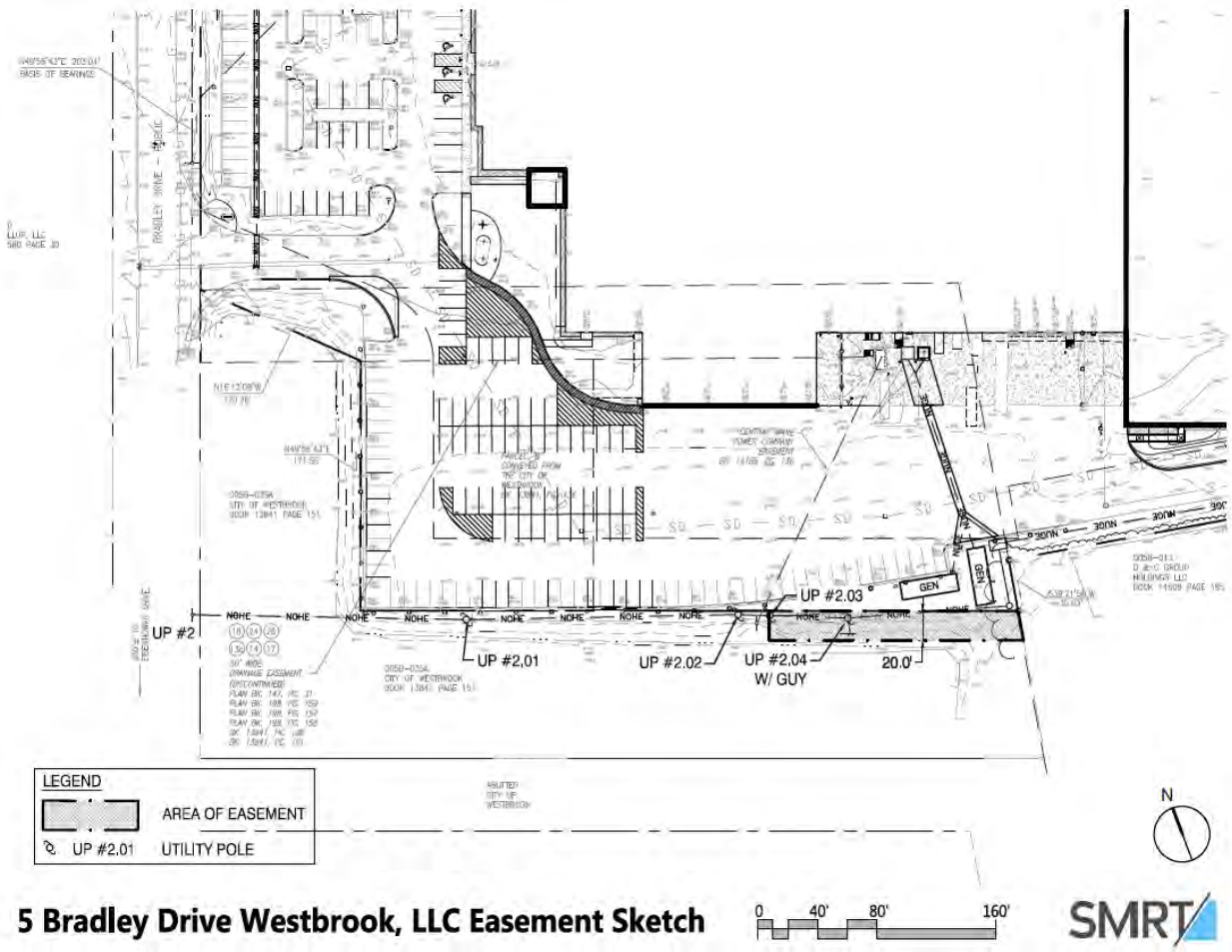

CMP EASEMENT

5 BRADLEY DRIVE WESTBROOK EASEMENT

Westbrook, ME

1 inch = 136 Feet

0 136 272 408

June 15, 2020

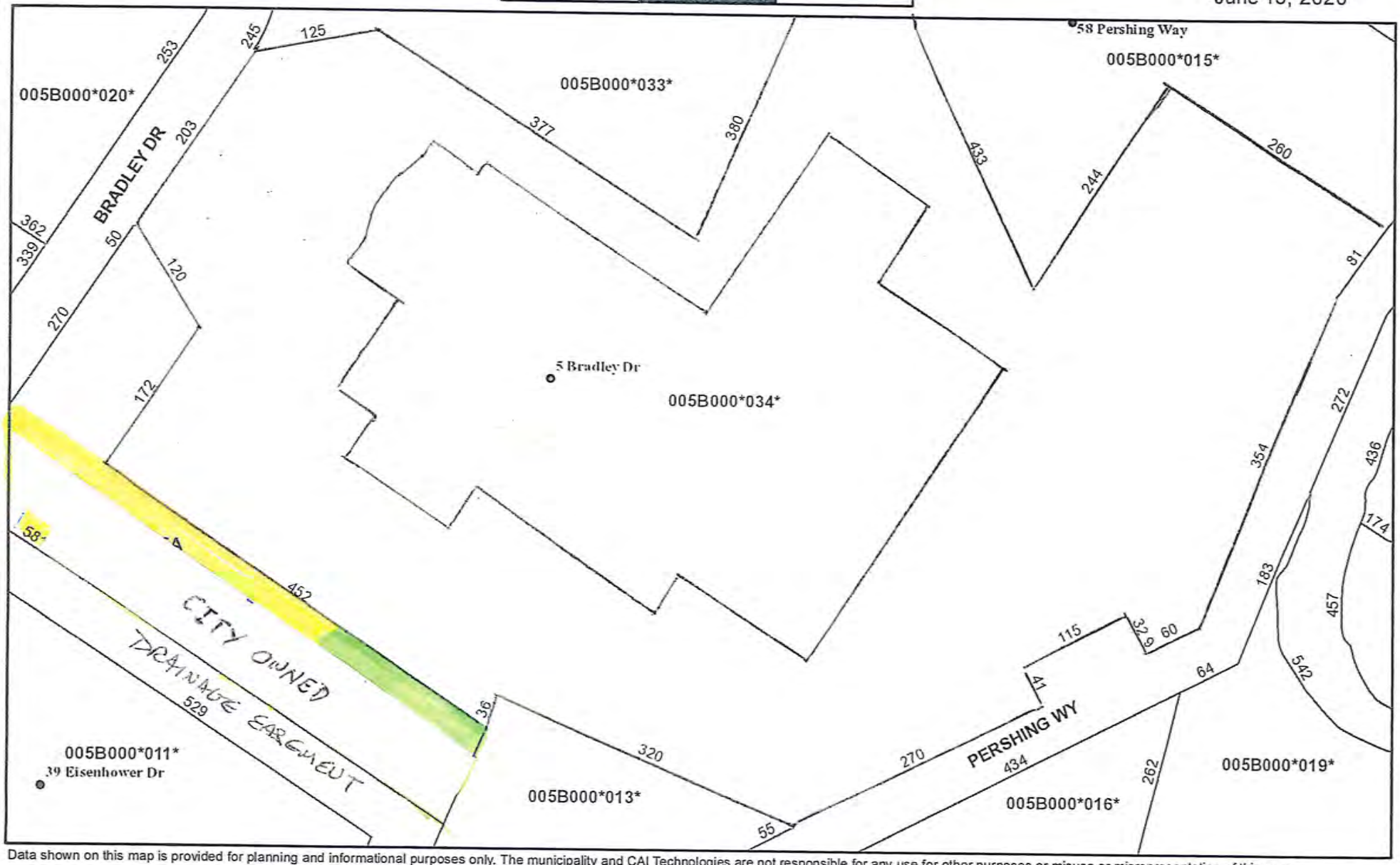

Data shown on this map is provided for planning and informational purposes only. The municipality and CAI Technologies are not responsible for any use for other purposes or misuse or misrepresentation of this map.

CITY OF WESTBROOK, MAINE

IN CITY COUNCIL

Date: August 3, 2020

Order: 2020-91

AUTHORIZING ACCEPTANCE OF EASEMENTS FOR MDOT PROJECTS

That the Westbrook City Council hereby authorizes the acceptance of the following easements in connection with the Maine Department of Transportation's BPI Intersection Projects at Eisenhower/Spring and Cumberland/Bridge, as outlined in the attached exhibits: Temporary Construction and Permanent Slope and Drainage Easement Deed from Lighthouse Christian Center to the City of Westbrook; Temporary Construction and Permanent Guardrail Easement Deed from Philip S. Cilley and Isabelle M. Cilley to the City of Westbrook; Temporary Construction, Permanent Guardrail and Permanent Slope Easement Deed from Timothy B. Bachelder to the City of Westbrook; and an Easement Deed from Guy L. Thompson and Laurie P. Thompson to the City of Westbrook.

First and Final Reading: August 3, 2020

Attest:

City Clerk

Mayor

CITY OF WESTBROOK, MAINE

2 York Street, Westbrook, ME 04092

REQUEST FOR COUNCIL ACTION

*Requests are due to the City Clerk two Fridays prior to a Council meeting. If expenditure/acceptance of funds is involved, Finance Department approval is required **prior** to submission.*

PROPOSED TITLE: MDOT BPI Intersection Projects - Acceptance of Construction/Perpetual Easements

REQUESTED BY: Jennie Franceschi

DATE: 07/28/2020

SUMMARY:

As part of the recent MDOT BPI Intersection Projects, the City was charged with acquisition of any easements on private property necessary to conduct the roadway improvements.

The necessary easements within the project limits requires permanent grading/guardrail easements, drainage easements and temporary construction easements to facilitate the intersection projects of Spring/Eisenhower and Bridge/Cumberland.

Attached are the packet containing 4 easements for acceptance.

Therefore, staff is requesting City Council authorize the acceptance of the attached easements as required by the MDOT BPI Intersection Projects underway at Eisenhower/Spring and Cumberland/Bridge.

BUDGET LINES AFFECTED (IF APPLICABLE):

None

AFTER RECORDING RETURN TO:
Nicholas J. Morrill, Esq.
Jensen Baird Gardner & Henry
P.O. Box 4510
Portland, Maine 04112-4510

TEMPORARY CONSTRUCTION, AND PERMANENT SLOPE AND DRAINAGE EASEMENT DEED

This TEMPORARY CONSTRUCTION, AND PERMANENT SLOPE AND DRAINAGE EASEMENT DEED ("Easement") is made this ____ day of _____, 2020, by and between **LIGHTHOUSE CHRISTIAN CENTER**, a Maine local independent church, formerly known as THE LIGHTHOUSE PENTECOSTAL ASSEMBLY, and also formerly known as LIGHTHOUSE PENTECOSTAL ASSEMBLY, with a mailing address of 636 Spring Street, Westbrook, Maine 04062 ("Grantor"), and the **CITY OF WESTBROOK**, a municipality organized and existing under the laws of the State of Maine, and having a mailing address of 2 York Street, Westbrook, Maine 04092 (the "City").

W I T N E S S E T H:

WHEREAS, Grantor is the owner of certain real estate and improvements located at 636 Spring Street in the City of Westbrook, County of Cumberland and State of Maine, being more particularly described in a deed dated November 10, 1983 and recorded in the Cumberland County Registry of Deeds in Book 6330, Page 200 (the "Burdened Land"); and

WHEREAS, the City desires to change the grade of, and the drainage located within, a portion of the Burdened Land adjacent to the highway known as Spring Street, which is more particularly shown on the plan titled "Easement Plan, Sheets 1 & 2, Spring Street & Eisenhower Drive, Westbrook, Maine" for Idexx, dated January 2020 as revised through 6/25/20, by BH2M, Inc. (the "Plan"), and the Grantor desires to consent to the same, upon the terms and conditions set forth herein.

NOW, THEREFORE, for good and valuable consideration, the receipt and sufficiency being hereby acknowledged, the Grantor and City agree as follows:

I. TEMPORARY CONSTRUCTION EASEMENT.

Grantor hereby grants to the City, its successors and assigns, the temporary right and easement, for the duration of the City's construction activity, to enter upon the Burdened Land, outside of and adjoining the southerly right of way line of Spring Street, so-called, in the City of Westbrook, County of Cumberland and State of Maine to perform all work including, but not limited to, necessary excavation, placing of fill, loaming, seeding, paving and other necessary incidental work as the City deems necessary, within the area depicted on the Plan as "Temporary Construction Easement," and being more particularly described as follows:

Beginning at a point on the northerly sideline of land of Grantor and on the southerly sideline of said Spring Street; said point of beginning being S 01˚-46'-21" E a tie distance of 25.24 feet from station 27+68.25 of the baseline of Spring Street as shown on the Plan;

thence in a general easterly direction along the southerly sideline of said Spring Street and along a circular curve to the right, circumscribed by a radius of 500.00 feet, an arc length of 55.90 feet to a point; said point being S 87˚-36'-06" E a tie distance of 55.87 feet from said previous point of beginning;

thence S 84˚-23'-55" E along the southerly sideline of said Spring Street a distance of 5.51 feet to a 1/2" iron rod found and land now or formerly of Bruce L. Chuluda;

thence S 31˚-38'-32" W across the land of Grantor a distance of 31.70 feet to a point;

thence N 89˚-47'-40" W across the land of Grantor a distance of 43.76 feet to a point.

thence N 01˚-46'-21" W across the land of Grantor a distance of 29.72 feet to the point of beginning.

The above described easement area encompasses 1539 s.f. All bearings refer to magnetic north as observed in 2018.

II. PERPETUAL SLOPE EASEMENT.

Grantor hereby grants to the City, its successors and assigns, the perpetual right and easement to clear, grub, construct and maintain slopes of the highway known as Spring Street, together with the right to enter on foot or in vehicles, with all the equipment necessary or reasonably required to accomplish the purposes of this easement, over, on, across and under a certain portion of the Burdened Land depicted on the Plan as "Slope Easement," and being more particularly described as follows:

Beginning at a point on the southerly sideline of said Spring Street at the northwesterly corner of land of Grantor and the northeasterly corner of land now or formerly of Timothy B. Bachelder; said point of beginning being S 16˚-51'-47" E a tie distance of 32.79 feet from station 23+51.37 of the baseline of Spring Street as shown on the Plan;

thence in a general easterly direction along the southerly sideline of said Spring Street, along the northerly sideline of land of Grantor and along a circular curve to the right, circumscribed by a radius of 1019.56 feet, an arc length of 94.24 feet to a point; said point being N 76˚-30'-17" E a tie distance of 94.20 feet from said previous point of beginning;

thence N 79˚-09'-09" E along the southerly sideline of said Spring Street and along the northerly sideline of land of Grantor a distance of 226.80 feet to a point;

thence in a general easterly direction along the southerly sideline of said Spring Street, along the northerly sideline of land of Grantor and along a circular curve to the right, circumscribed by a radius of 500.00 feet, an arc length of 87.64 feet to a point; said point being N 84˚-10'-26" E a tie distance of 87.53 feet from said previous point;

thence S 01˚-46'-21" E across the land of Grantor a distance of 29.72 feet to a point;

thence N 89˚-47'-40" W across the land of Grantor a distance of 36.98 feet to a point;

thence S 85˚-36'-11" W across the land of Grantor a distance of 76.92 feet to a point;

thence S 06˚-02'-46" E across the land of Grantor a distance of 12.40 feet to a point;

thence S 87˚-36'-23" W across the land of Grantor a distance of 27.83 feet to a point;

thence N 07˚-05'-44" W across the land of Grantor a distance of 12.45 feet to a point;

thence S 89˚-01'-13" W across the land of Grantor a distance of 39.58 feet to a point;

thence S 79˚-09'-09" W across the land of Grantor a distance of 127.86 feet to a point;

thence S 13˚-20'-35" E across the land of Grantor a distance of 10.45 feet to a point;

thence S 57˚-15'-14" W across the land of Grantor a distance of 34.78 feet to a point;

thence S 67˚-49'-47" W across the land of Grantor a distance of 23.95 feet to a point;

thence S 87˚-39'-43" W across the land of Grantor a distance of 36.60 feet to a point;

thence S 79˚-01'-22" W across the land of Grantor a distance of 1.28 feet to a point and land of said Bachelder;

thence N 17˚-23'-18" W along the land of said Bachelder a distance of 28.88 feet to the point of beginning.

The above described easement area encompasses 8773 s.f. All bearings refer to magnetic north as observed in 2018.

III. <u>PERPETUAL DRAINAGE EASEMENT #1</u>.

Grantor hereby grants to the City, its successors and assigns, the perpetual right and easement to construct, use, maintain and repair drainage structures and piping, together with a right of entry on foot or in vehicles, with all the equipment necessary or reasonably required to accomplish the purposes of this easement, over, on, across and under a certain portion of the Burdened Land being depicted on the Plan as "Drainage Easement," and being more particularly described as follows:

Beginning at a point on the northerly sideline of land of Grantor and on the southerly sideline of said Spring Street; said point of beginning being S 11˚-52'-15" E a tie distance of 36.79 feet from station 24+89.78 of the baseline of Spring Street as shown on aforesaid plan;

thence N 79˚-09'-09" E along the southerly sideline of said Spring Street a distance of 20.00 feet to a point; said point being S 11˚-07'-42" E a tie distance of 37.02 feet from station 25+10.26 of the baseline of Spring Street as shown on aforesaid plan;

thence S 11˚-07'-42" E across the land of Grantor a distance of 10.34 feet to a point;

thence S 79˚-09'-09" W across the land of Grantor a distance of 19.87 feet to a point;

thence N 11˚-52'-15" W across the land of Grantor a distance of 10.34 feet to the point of beginning.

The above described easement area encompasses 206 s.f. All bearings refer to magnetic north as observed in 2018.

IV. PERPETUAL DRAINAGE EASEMENT #2.

Grantor hereby grants to the City, its successors and assigns, the perpetual right and easement to construct, use, maintain and repair drainage structures and piping, together with a right of entry on foot or in vehicles, with all the equipment necessary or reasonably required to accomplish the purposes of this easement, over, on, across and under a certain portion of the Burdened Land being depicted on the Plan as "Drainage Easement," and being more particularly described as follows:

Beginning at a point on the northerly sideline of land of Grantor, and on the southerly sideline of said Spring Street; said point of beginning being S 08˚-33'-57'-E a tie distance of 35.81 feet form station 25+80.92 of the baseline of Spring Street as shown on the Plan;

thence N 79˚-09'-09" E along the southerly sideline of said Spring Street a distance of 52.97 feet to a point; said point being S 06˚-36'-19" E a tie distance of 32.80 feet from station 26+34.99 of the baseline of Spring Street as shown on aforesaid plan;

thence S 06˚-36'-19" E across the land of Grantor a distance of 19.66 feet to a point;

thence S 43˚-16'-33" W across the land of Grantor a distance of 36.65 feet to a point;

thence N 46˚-43'-27" W across the land of Grantor a distance of 37.94 feet to a point;

thence N 08˚-33'-57" W across the land of Grantor a distance of 10.35 feet to the point of beginning.

The above described easement area encompasses 1485 s.f. All bearings refer to magnetic north as observed in 2018.

V. MISCELLANEOUS PROVISIONS.

1. Amendments, Etc. No amendment, modification, or waiver of any provision of this Easement, or consent to any departure from the terms of this Easement by any party hereto shall be effective unless the same shall be in writing and signed by all the parties hereto, and then such waiver or consent shall be effective only in the specific instance and for the specific purpose for which given.

2. No Waiver; Remedies. No failure on the part of any party hereto to exercise, and no delay in exercising, any right hereunder shall operate as a waiver thereof, nor shall any single or partial exercise of any right hereunder preclude any other or further exercise thereof or the exercise of any other right. The remedies herein provided are cumulative and not exclusive of any remedies provided by law.

3. Successors and Assigns. This Easement shall be binding upon and inure to the benefit of the parties hereto and their respective successors and assigns.

4. Governing Law. This Easement shall be governed by, and construed in accordance with, the laws of the State of Maine, regardless of the law that might otherwise govern under applicable principles of conflict of laws thereof.

5. Entire Agreement. This Easement embodies the entire agreement and understanding of the parties hereto in respect of the subject matter hereof and supersedes all prior agreements, representations, warranties, and understandings between or among the parties with respect to such subject matter.

[SIGNATURE PAGES TO FOLLOW]

IN WITNESS WHEREOF, the Lighthouse Christian Center, formerly known as The Lighthouse Pentecostal Assembly, formerly known as Lighthouse Pentecostal Assembly, has caused this instrument to be signed and sealed in its corporate name by Linda Wilson, Chair of the Board of Directors, duly authorized this ____ day of _____, 2020.

WITNESS:

LIGHTHOUSE CHRISTIAN CENTER, formerly known as The Lighthouse Pentecostal Assembly, formerly known as Lighthouse Pentecostal Assembly

_____

By:_____
Linda Wilson
Title: Chair of the Board of Directors

STATE OF MAINE
COUNTY OF CUMBERLAND, ss.

_____, 2020

Then personally appeared before me, the above-named Linda Wilson, Chair of the Board of Directors of the Lighthouse Christian Center, formerly known as The Lighthouse Pentecostal Assembly, formerly known as Lighthouse Pentecostal Assembly, and acknowledged the foregoing instrument to be her free act and deed in her said capacity, and the free act and deed of the Lighthouse Christian Center, formerly known as The Lighthouse Pentecostal Assembly, formerly known as Lighthouse Pentecostal Assembly.

_____
Notary Public
Printed Name:
My Commission Expires:_____

IN WITNESS WHEREOF, the City of Westbrook has caused this instrument to be signed and sealed in its corporate name by Michael T. Foley, Mayor, duly authorized this ____ day of _____, 2020.

WITNESS: CITY OF WESTBROOK

_____ By:_____

Michael T. Foley
Title: Mayor

STATE OF MAINE
COUNTY OF CUMBERLAND, ss. _____, 2020

Then personally appeared before me, the above-named Michael T. Foley, Mayor of the City of Westbrook, and acknowledged the foregoing instrument to be his free act and deed and the free act and deed of the City of Westbrook.

_____
Notary Public
Printed Name:
My Commission Expires:_____

NOTES:

1. PLAN PURPOSE IS TO SHOW THE LOCATION OF EASEMENTS. ORIGINAL RIGHT OF WAY FIELD WORK AND DETERMINATION WAS PREFORMED BY MAIN-LAND DEVELOPMENT CONSULTANTS. RIGHT OF WAY PLAN WAS BY TY-LIN INTERNATIONAL. BH2M PREFORMED FIELD WORK TO ESTABLISH THE PROPERTY SIDELINES OF ABUTTERS ONLY.

2. PLAN REFERENCES:
   A. "SPRING STREET AND EISENHOWER DRIVE, EASEMENT PLAN, SHEETS 1 OF 2" BY TY-LIN INTERNATIONAL FOR IDEXX LABORATORIES INC., PROVIDED BY TY-LIN INTERNATIONAL JAN. 2020

EASEMENT LINE DATA

E1 N22°37'50"W, 14.29'
E2 S73°48'23"W, 15.10'
E3 N22°37'50"W, 12.62'
E4 N67°26'03"E, 15.00'
E5 S73°48'23"W, 45.36'
E6 S67°26'03"W, 46.27'
E7 N71°29'48"W, 18.31'
E8 S69°02'17"W, 21.66'
E9 S00°55'40"E, 16.42'
E10 S20°18'14"E, 16.48'
E11 N67°26'03"E, 97.83'
E13 S79°01'22"W, 91.88'
E14 S87°39'43"W, 36.60'
E15 S67°49'47"W, 23.95'
E16 S57°15'14"W, 34.78'
E17 S13°20'35"E, 10.45'
E18 S79°09'09"W, 127.86'
E19 S89°01'13"W, 39.58'
E20 S07°05'44"E, 12.45'
E21 S87°36'23"W, 27.83'
E22 S06°02'46"E, 12.40'
E23 S85°36'11"W, 76.92'
E24 N89°47'40"W, 36.98'
E25 N01°46'21"W, 29.72'
E27 N79°09'09"E, 226.80'
E30 S84°23'55"E, 5.51'
E31 S31°38'32"W, 31.70'
E32 N89°47'40"W, 43.76'
E33 S11°52'15"E, 36.79'
E34 S11°07'42"E, 37.02'
E35 N79°09'09"E, 20.00'
E36 S11°07'42"E, 10.34'
E37 S79°09'09"W, 19.87'
E38 N11°52'15"W, 10.34'
E39 S08°33'57"E, 35.81'
E40 S06°36'19"E, 32.80'
E41 N79°09'09"E, 52.97'
E42 S06°36'19"E, 19.66'
E43 S43°16'33"W, 36.65'
E44 N46°43'27"W, 37.94'
E45 N08°33'57"W, 10.35'
E46 N67°26'03"E, 35.96'
E47 S04°04'38"E, 20.38'
E48 S67°26'03"W, 22.34'
E50 S17°23'18"E, 28.88'
E51 S79°01'22"W, 1.28'
E52 N67°26'03"E, 14.60'
E53 S21°51'25"E, 15.00'
E54 S67°26'03"W, 14.60'
E55 N21°51'25"W, 15.00'
E57 S20°18'14"E, 15.00'
E58 S68°16'31"W, 14.23'
E59 N20°18'14"W 15.00'

EASEMENT CURVE DATA

E12 RADIUS 1019.56', ARC LENGTH 22.08'
CHORD N68°03'17"E, 22.08'

E26 RADIUS 500.00', ARC LENGTH 87.64'
CHORD N84°10'26"E, 87.53'

E28 RADIUS 1019.56', ARC LENGTH 94.24'
CHORD N76°30'17"E, 94.20'

E29 RADIUS 500.00', ARC LENGTH 55.90'
CHORD S87°36'06"E, 55.87'

E49 RADIUS 1019.56', ARC LENGTH 92.20'
CHORD N71°15'58"E, 92.17'

E56 RADIUS 1019.56', ARC LENGTH 14.23'
CHORD N68°16'31"E, 14.23'

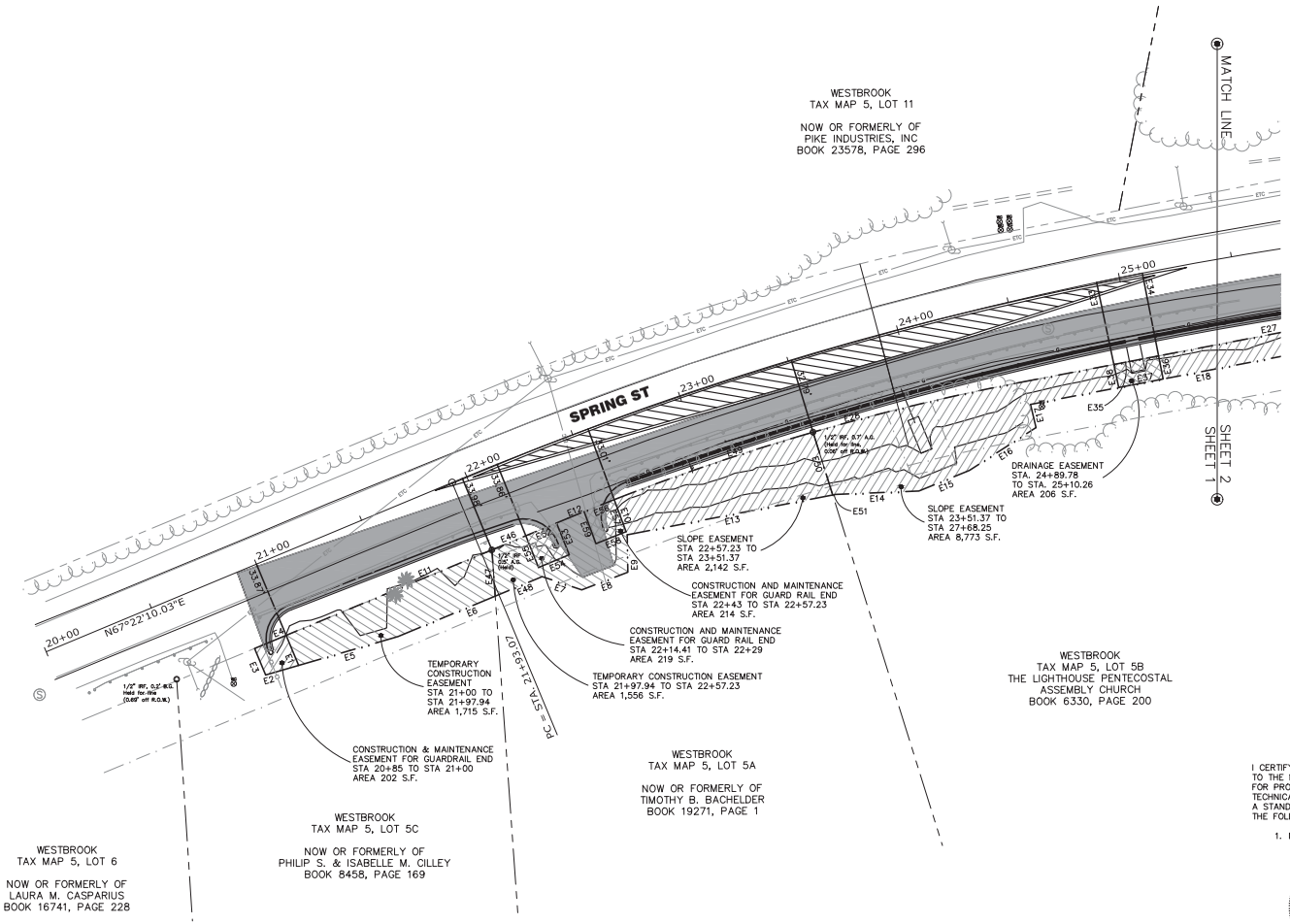

I CERTIFY THAT THIS SURVEY CONFORMS TO THE MAINE BOARD OF LICENSURE FOR PROFESSIONAL LAND SURVEYORS TECHNICAL STANDARDS OF PRACTICE FOR A STANDARD BOUNDARY SURVEY WITH THE FOLLOWING EXCEPTIONS:

1. NO SURVEYORS REPORT

STATE OF MAINE
ROBERT C. LIBBY JR.
2190
PROFESSIONAL LICENSED SURVEYOR

ROBERT C. LIBBY JR. PLS #2190

REVISION		
NO.	DATE	DESCRIPTION
1	4/27/20	Added Abutters Property Lines
2	6/25/20	Added Guard Rail Construction & Maintenance Easement

BH2M
Berry, Huff, McDonald, Milligan Inc.
Engineers, Surveyors
29 State Street
Gorham, Maine 04038
Tel (207) 839-2771
Fax (207) 839-8250

FOR
Idexx Laboratories Inc.
1 Idexx Drive
Westbrook, Maine 04092

EASEMENT PLAN

SPRING STREET & EISENHOWER DRIVE
WESTBROOK, MAINE

DESIGNED	DATE
Dept.	Jan. 2020
DRAWN	SCALE
Dept.	1" = 25'
CHECKED	JOB. NO.
R. Libby Jr.	19208

SHEET
1

REPRODUCTION OR REUSE OF THIS DOCUMENT WITHOUT THE EXPRESSED WRITTEN CONSENT OF BH2M INC. IS PROHIBITED

G:\2019\19208-IDEXX PLACE\19208.dwg, 6/25/2020 9:14 AM

NOTES:

1. PLAN PURPOSE IS TO SHOW THE LOCATION OF EASEMENTS. ORIGINAL RIGHT OF WAY FIELD WORK AND DETERMINATION WAS PREFORMED BY MAIN-LAND DEVELOPMENT CONSULTANTS. RIGHT OF WAY PLAN WAS BY TY-LIN INTERNATIONAL. BH2M PREFORMED FIELD WORK TO ESTABLISH THE PROPERTY SIDELINES OF ABUTTERS ONLY.

2. PLAN REFERENCES:
   A. "SPRING STREET AND EISENHOWER DRIVE, EASEMENT PLAN, SHEETS 1 OF 2" BY TY-LIN INTERNATIONAL FOR IDEXX LABORATORIES INC., PROVIDED BY TY-LIN INTERNATIONAL JAN. 2020

EASEMENT LINE DATA

E1	N22°37'50"W, 14.29'
E2	S73°48'23"W, 15.10'
E3	N22°37'50"W, 12.62'
E4	N67°26'03"E, 15.00'
E5	S73°48'23"W, 45.36'
E6	S67°26'03"W, 46.27'
E7	N71°29'48"W, 18.31'
E8	S69°02'17"W, 21.66'
E9	S00°55'40"E, 16.42'
E10	S20°18'14"E, 16.48'
E11	N67°26'03"E, 97.83'
E13	S79°01'22"W, 91.88'
E14	S87°39'43"W, 36.60'
E15	S67°49'47"W, 23.95'
E16	S57°15'14"W, 34.78'
E17	S13°20'35"E, 10.45'
E18	S79°09'09"W, 127.86'
E19	S89°01'13"W, 39.58'
E20	S07°05'44"E, 12.45'
E21	S87°36'23"W, 27.83'
E22	S06°02'46"E, 12.40'
E23	S85°36'11"W, 76.92'
E24	N89°47'40"W, 36.98'
E25	N01°46'21"W, 29.72'
E27	N79°09'09"E, 226.80'
E30	S84°23'55"E, 5.51'
E31	S31°38'32"W, 31.70'
E32	N89°47'40"W, 43.76'
E33	S11°52'15"E, 36.79'
E34	S11°07'42"E, 37.02'
E35	N79°09'09"E, 20.00'
E36	S11°07'42"E, 10.34'
E37	S79°09'09"W, 19.87'
E38	N11°52'15"W, 10.34'
E39	S08°33'57"E, 35.81'
E40	S06°36'19"E, 32.80'
E41	N79°09'09"E, 52.97'
E42	S06°36'19"E, 19.66'
E43	S43°16'33"W, 36.65'
E44	N46°43'27"W, 37.94'
E45	N08°33'57"W, 10.35'
E46	N67°26'03"E, 35.96'
E47	S04°04'38"E, 20.38'
E48	S67°26'03"W, 22.34'
E50	S17°23'18"E, 28.88'
E51	S79°01'22"W, 1.28'

EASEMENT CURVE DATA

E12	RADIUS 1019.56', ARC LENGTH 22.08' CHORD N68°03'17"E, 22.08'
E26	RADIUS 500.00', ARC LENGTH 87.64' CHORD N84°10'26"E, 87.53'
E28	RADIUS 1019.56', ARC LENGTH 94.24' CHORD N76°30'17"E, 94.20'
E29	RADIUS 500.00', ARC LENGTH 55.90' CHORD S87°36'06"E, 55.87'
E49	RADIUS 1019.56', ARC LENGTH 92.20' CHORD N71°15'58"E, 92.17'

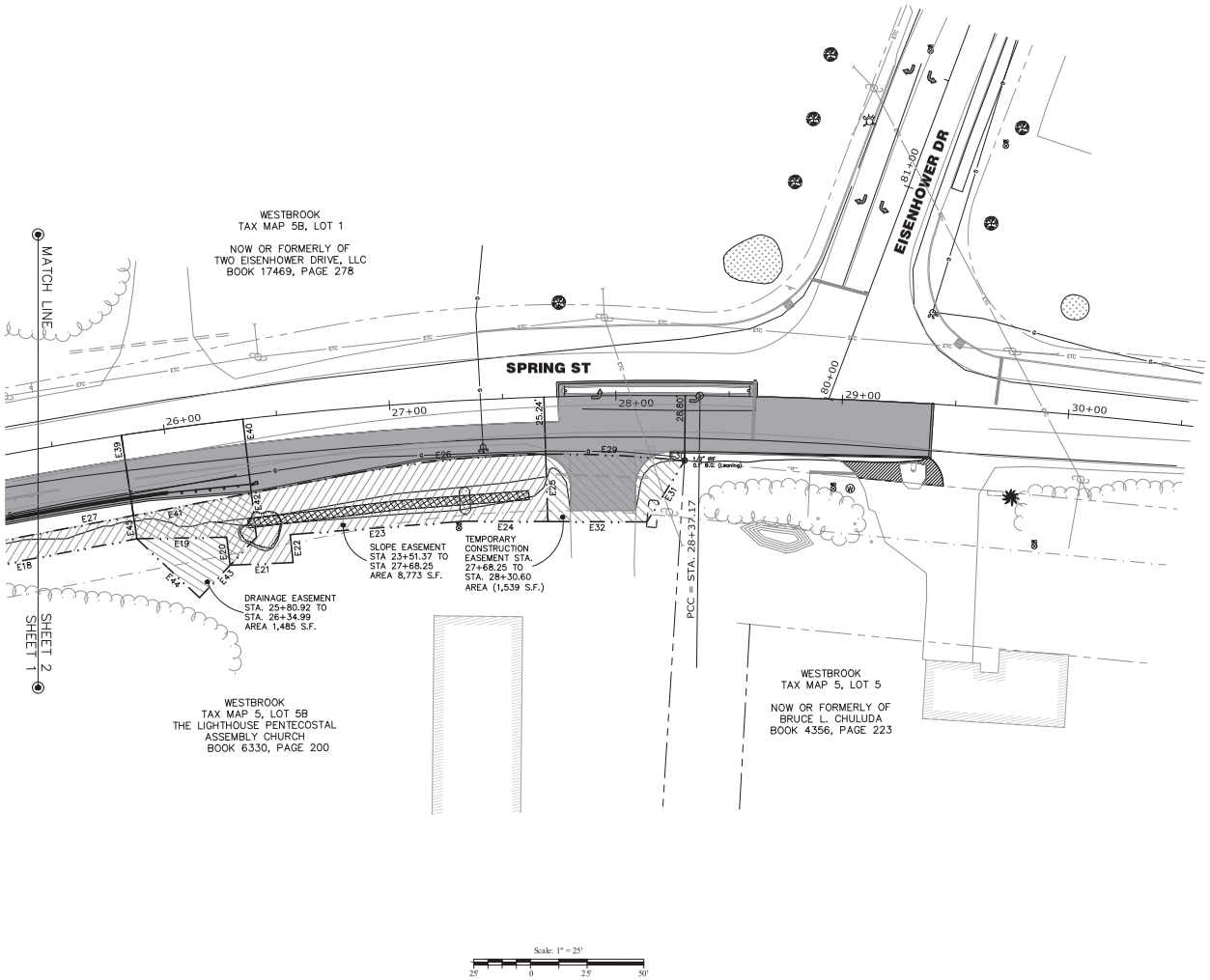

I CERTIFY THAT THIS SURVEY CONFORMS TO THE MAINE BOARD OF LICENSURE FOR PROFESSIONAL LAND SURVEYORS TECHNICAL STANDARDS OF PRACTICE FOR A STANDARD BOUNDARY SURVEY WITH THE FOLLOWING EXCEPTIONS:

1. NO SURVEYORS REPORT

STATE OF MAINE
ROBERT C. LIBBY JR.
2190
PROFESSIONAL LAND SURVEYOR

ROBERT C. LIBBY JR. PLS #2190

NO.	DATE	REVISION DESCRIPTION
1	4/27/20	Added Abutters Property Lines

BH2M
Berry, Huff, McDonald, Milligan Inc.
Engineers, Surveyors
29 State Street
Gorham, Maine 04038
Tel (207) 839-2771
Fax (207) 839-8250

FOR
Idexx Laboratories Inc.
One IDEXX Drive
Westbrook, Maine 04092

EASEMENT PLAN

SPRING STREET & EISENHOWER DRIVE
WESTBROOK, MAINE

DESIGNED	DATE
Dept.	Jan. 2020
DRAWN	SCALE
Dept.	1" = 25'
CHECKED	JOB. NO.
R. Libby Jr.	19208

SHEET
2

REPRODUCTION OR REUSE OF THIS DOCUMENT WITHOUT THE EXPRESSED WRITTEN CONSENT OF BH2M INC. IS PROHIBITED

G:\2019\19208-IDEXX PALMER\19208.dwg, 5/5/2020 2:48 PM

AFTER RECORDING RETURN TO:
Nicholas J. Morrill, Esq.
Jensen Baird Gardner & Henry
P.O. Box 4510
Portland, Maine 04112-4510

TEMPORARY CONSTRUCTION, AND PERMANENT GUARDRAIL EASEMENT DEED

This TEMPORARY CONSTRUCTION, AND PERMANENT GUARDRAIL EASEMENT DEED ("Easement") is made this ____ day of _____, 2020, by and between **PHILIP S. CILLEY** and **ISABELLE M. CILLEY**, whose mailing address is 668 Spring Street, Westbrook, Maine 04062 (collectively, "Grantor"), and the **CITY OF WESTBROOK**, a municipality organized and existing under the laws of the State of Maine, and having a mailing address of 2 York Street, Westbrook, Maine 04092 (the "City").

W I T N E S S E T H:

WHEREAS, Grantor is the owner of certain real estate and improvements located at 668 Spring Street in the City of Westbrook, County of Cumberland and State of Maine, being more particularly described in a deed dated September 1, 1988 and recorded in the Cumberland County Registry of Deeds in Book 8458, Page 169 (the "Burdened Land"); and

WHEREAS, the City desires to install a guardrail located on a portion of the Burdened Land adjacent to the highway known as Spring Street, which is more particularly shown on the plan titled "Easement Plan, Sheets 1 & 2, Spring Street & Eisenhower Drive, Westbrook, Maine" for Idexx, dated January 2020 as revised through 6/25/20, by BH2M, Inc. (the "Plan"), and the Grantor desires to consent to the same, upon the terms and conditions set forth herein.

NOW, THEREFORE, for good and valuable consideration, the receipt and sufficiency being hereby acknowledged, the Grantor and City agree as follows:

I. TEMPORARY CONSTRUCTION EASEMENT.

Grantor hereby grants to the City, its successors and assigns, the temporary right and easement, for the duration of the City's construction activity, to enter upon the Burdened Land, outside of and adjoining the southerly right of way line of Spring Street, so-called, in the City of Westbrook, County of Cumberland and State of Maine to perform all work including, but not limited to, necessary excavation, placing of fill, loaming, seeding, paving and other necessary incidental work as the City deems necessary, within the area depicted on the Plan as "Temporary Construction Easement," and being more particularly described as follows:

Beginning at a point on the northerly sideline of land of Grantor and on the southerly sideline of said Spring Street; said point of beginning being S 22˚-37'-50" E a tie distance of 33.87 feet from station 21+00 of the baseline of Spring Street as shown on the Plan;

thence N 67˚-26'-03" E along the southerly sideline of said Spring Street and along the northerly sideline of land of Grantor a distance of 97.83 feet to a ½" iron rod found and land now or formerly of Timothy B. Bachelder;

thence S 04˚-04'-38" E along the land of said Bachelder a distance of 20.38 feet to a point;

thence S 67˚-26'-03" W across land of Grantor a distance of 46.27 feet to a point;

thence S 73˚-48'-23" W across the land of Grantor a distance of 45.36 feet to a point;

thence N 22˚-37'-50" W across the land of Grantor a distance of 14.29 feet to the point of beginning.

The above described easement area encompasses 1715 s.f. All bearings refer to magnetic north as observed in 2018.

II. <u>PERPETUAL GUARDRAIL EASEMENT</u>.

Grantor hereby grants to the City, its successors and assigns, the perpetual right and easement to construct, use, maintain and repair a guardrail with a right of entry on foot or in vehicles, with all the equipment necessary or reasonably required to accomplish the purposes of this easement, over, on, across and under a certain portion of the Burdened Land depicted on the Plan as "Construction & Maintenance Easement for Guardrail End," and being more particularly described as follows:

Beginning at a point on the northerly sideline of land of Grantor and on the southerly sideline of said Spring Street; said point of beginning being S 22˚-37'-50" E a tie distance of 33.87 feet from station 21+00 of the baseline of Spring Street as shown on the aforesaid plan;

thence S 22˚-37'-50" E across the land of Grantor a distance of 14.29 feet to a point;

thence S 73˚-48'-23" W across the land of Grantor a distance of 15.10 feet to a point;

thence N 22˚-37'-50" W across the land of Grantor a distance of 12.62 feet to a point on the southerly sideline of said Spring Street; said point being S 22˚-37'-50" E a tie distance of 33.86 feet from the baseline station 20+85 as shown on the Plan;

thence N 67˚-26'-03" E along the southerly sideline of said Spring Street a distance of 15.00 feet to the point of beginning.

The above described easement area encompasses 202 s.f. All bearings refer to magnetic north as observed in 2018.

III. MISCELLANEOUS PROVISIONS.

1. Amendments, Etc. No amendment, modification, or waiver of any provision of this Easement, or consent to any departure from the terms of this Easement by any party hereto shall be effective unless the same shall be in writing and signed by all the parties hereto, and then such waiver or consent shall be effective only in the specific instance and for the specific purpose for which given.

2. No Waiver; Remedies. No failure on the part of any party hereto to exercise, and no delay in exercising, any right hereunder shall operate as a waiver thereof, nor shall any single or partial exercise of any right hereunder preclude any other or further exercise thereof or the exercise of any other right. The remedies herein provided are cumulative and not exclusive of any remedies provided by law.

3. Successors and Assigns. This Easement shall be binding upon and inure to the benefit of the parties hereto and their respective successors and assigns.

4. Governing Law. This Easement shall be governed by, and construed in accordance with, the laws of the State of Maine, regardless of the law that might otherwise govern under applicable principles of conflict of laws thereof.

5. Entire Agreement. This Easement embodies the entire agreement and understanding of the parties hereto in respect of the subject matter hereof and supersedes all prior agreements, representations, warranties, and understandings between or among the parties with respect to such subject matter.

[SIGNATURE PAGES TO FOLLOW]

IN WITNESS WHEREOF, Philip S. Cilley and Isabelle M. Cilley have set their hand and seal this ____ day of _____, 2020.

WITNESS:

_____ _____
Philip S. Cilley

_____ _____
Isabelle M. Cilley

STATE OF MAINE
COUNTY OF CUMBERLAND, ss. _____, 2020

Then personally appeared before me, the above-named Philip S. Cilley and Isabelle M. Cilley, and acknowledged the foregoing instrument to be their free acts and deeds.

_____
Notary Public
Printed Name:
My Commission Expires:_____

IN WITNESS WHEREOF, the City of Westbrook has caused this instrument to be signed and sealed in its corporate name by Michael T. Foley, Mayor, duly authorized this ____ day of _____, 2020.

WITNESS: CITY OF WESTBROOK

_____ By:_____

Michael T. Foley
Title: Mayor

STATE OF MAINE
COUNTY OF CUMBERLAND, ss. _____, 2020

Then personally appeared before me, the above-named Michael T. Foley, Mayor of the City of Westbrook, and acknowledged the foregoing instrument to be his free act and deed and the free act and deed of the City of Westbrook.

_____
Notary Public
Printed Name:
My Commission Expires:_____

AFTER RECORDING RETURN TO:
Nicholas J. Morrill, Esq.
Jensen Baird Gardner & Henry
P.O. Box 4510
Portland, Maine 04112-4510

TEMPORARY CONSTRUCTION, PERMANENT GUARDRAIL AND PERMANENT SLOPE EASEMENT DEED

This TEMPORARY CONSTRUCTION, PERMANENT GUARDRAIL AND PERMANENT SLOPE EASEMENT DEED ("Easement") is made this ____ day of _____, 2020, by and between **TIMOTHY B. BACHELDER**, whose mailing address is 648 Spring Street, Westbrook, Maine 04062 ("Grantor"), and the **CITY OF WESTBROOK**, a municipality organized and existing under the laws of the State of Maine, and having a mailing address of 2 York Street, Westbrook, Maine 04092 (the "City").

W I T N E S S E T H:

WHEREAS, Grantor is the owner of certain real estate and improvements located at 648 Spring Street in the City of Westbrook, County of Cumberland and State of Maine, being more particularly described in a deed dated April 25, 2003 and recorded in the Cumberland County Registry of Deeds in Book 19271, Page 1 (the "Burdened Land"); and

WHEREAS, the City desires to change the grade of a portion of the Burdened Land adjacent to the highway known as Spring Street, which is more particularly shown on the plan titled "Easement Plan, Sheets 1 & 2, Spring Street & Eisenhower Drive, Westbrook, Maine" for Idexx, dated January 2020 as revised through 6/25/20, by BH2M, Inc. (the "Plan"), and the Grantor desires to consent to the same, upon the terms and conditions set forth herein.

NOW, THEREFORE, for good and valuable consideration, the receipt and sufficiency being hereby acknowledged, the Grantor and City agree as follows:

I. TEMPORARY CONSTRUCTION EASEMENT.

Grantor hereby grants to the City, its successors and assigns, the temporary right and easement, for the duration of the City's construction activity, to enter upon the Burdened Land, outside of and adjoining the southerly right of way line of Spring Street, so-called, in the City of Westbrook, County of Cumberland and State of Maine to perform all work including, but not limited to, necessary excavation, placing of fill, loaming, seeding, paving and other necessary incidental work as the City deems necessary, within the area depicted on the Plan as "Temporary Construction Easement," and being more particularly described as follows:

Beginning at a ½" iron rod found on the southerly sideline of said Spring Street at the northwesterly corner of land of Grantor and the northeasterly corner of land now or formerly of Philip S. Cilley adn Isabelle M. Cilley; said point of beginning being S 22˚-

27'-15" E a tie distance of 33.98 feet from station 21+00 of the baseline of Spring Street as shown on aforesaid plan;

thence N 67˚-26'-03" E along the southerly sideline of said Spring Street and along the northerly sideline of land of Grantor a distance of 35.96 feet to a point;

thence in a general easterly direction along the southerly sideline of said Spring Street, along the northerly sideline of Grantor and along a circular curve to the right, circumscribed by a radius of 1019.56 feet, an arc length of 22.08 feet to a point; said point being N 68˚-03'-17" E a tie distance of 22.08 feet from said previous point;

thence S 20˚-18'-14" E across the land of Grantor a distance of 16.48 feet to a point;

thence S 00˚-55'-40" E across the land of Grantor a distance of 16.42 feet to a point;

thence S 69˚-02'-17" W across the land of Grantor a distance of 21.66 feet to a point;

thence N 71˚-29'-48" W across the land of Grantor a distance of 18.31 feet to a point;

thence S 67˚-26'-03" W across the land of Grantor a distance of 22.34 feet to a point and land of said Cilley;

thence N 04˚-04'-38" W along the land of said Cilley a distance of 20.38 feet to the point of beginning.

The above described easement area encompasses 1556 s.f. All bearings refer to magnetic north as observed in 2018.

II. PERPETUAL GUARDRAIL EASEMENTS.

EASEMENT 1 - Grantor hereby grants to the City, its successors and assigns, the perpetual right and easement to construct, use, maintain and repair a guardrail with a right of entry on foot or in vehicles, with all the equipment necessary or reasonably required to accomplish the purposes of this easement, over, on, across and under a certain portion of the Burdened Land depicted on the Plan as "Construction & Maintenance Easement for Guardrail End STA 22+14.41 TO STA 22+29," and being more particularly described as follows:

Beginning at a point on the northerly sideline of land of Timothy B. Bachelder and on the southerly sideline of said Spring Street; said point of beginning being S 21˚-51'-25" E a tie distance of 33.86 feet from station 22+14.41 of the baseline of Spring Street as shown on the aforesaid plan;

thence N 67˚-26'-03" E along the southerly sideline of said Spring Street a distance of 14.60 feet to a point;

thence S 21˚-51'-25" E across the land of said Bachelder a distance of 15.00 feet to a point;

thence S 67˚-26'-03" W across the land of said Bachelder a distance of 14.60 feet to a point;

thence N 21˚-51'-25" W across the land of said Bachelder a distance of 15.00 feet to the point of beginning.

The above described construction & maintenance easement encompasses 219 s.f.. All bearings refer to magnetic north as observed in 2018.

EASEMENT 2 - Grantor hereby grants to the City, its successors and assigns, the perpetual right and easement to construct, use, maintain and repair a guardrail with a right of entry on foot or in vehicles, with all the equipment necessary or reasonably required to accomplish the purposes of this easement, over, on, across and under a certain portion of the Burdened Land depicted on the Plan as "Construction & Maintenance Easement for Guardrail End STA 22+43 TO STA 22+57.23," and being more particularly described as follows:

Beginning at a point on the northerly sideline of land of Timothy B. Bachelder and on the southerly sideline of said Spring Street; said point of beginning being S 20˚-18'-14" E a tie distance of 33.01 feet from station 22+57.23 of the baseline of Spring Street as shown on the aforesaid plan;

thence S 20˚-18'-14" E across the land of said Bachelder a distance of 15.00 feet to a point;

thence S 68˚-16'-31" W across the land of said Bachelder a distance of 14.23 feet to a point;

thence N 20˚-18'-14" W across the land of said Bachelder a distance of 15.00 feet to a point on the southerly sideline of said Spring Street;

thence in general northeasterly direction along the southerly sideline of said Spring Street and along a circular curve to the right, circumscribed by a radius of 1019.56 feet, an arc length of 14.23 feet to the point of beginning. Said point of beginning being N 68˚-16'-31" E a tie distance of 14.23 feet form said previous point.

The above described construction & maintenance easement encompasses 214 s.f.. All bearings refer to magnetic north as observed in 2018.

III. PERPETUAL SLOPE EASEMENT.

Grantor hereby grants to the City, its successors and assigns, the perpetual right and easement to clear, grub, construct and maintain slopes of the highway known as Spring Street, together with the right to enter on foot or in vehicles, with all the equipment necessary or reasonably required to accomplish the purposes of this easement, over, on, across and under a certain portion of the Burdened Land depicted on the Plan as "Slope Easement," and being more particularly described as follows:

Beginning at a point on the northerly sideline of land of Grantor and on the southerly sideline of said Spring Street; said point of beginning being S 20˚-18'-14" E a tie distance of 33.01 feet from station 22+57.23 of the baseline of Spring Street as shown on the Plan;

thence in a general easterly direction along the southerly sideline of said Spring Street, along the northerly sideline of land of Grantor and along a circular curve to the right, circumscribed by a radius of 1019.56 feet, an arc length of 92.20 feet to a point and land now or formerly of Lighthouse Christian Center; said point being N 71˚-15'-58" E a tie distance of 92.17 feet from said previous point;

thence S 17˚-23'-18" E along the land of Lighthouse Christian Center a distance of 28.88 feet to a point;

thence S 79˚-01'-22" W across the land of Grantor a distance of 91.88 feet to a point;

thence N 20˚-18'-14" W across the land of Grantor a distance of 16.48 feet to the point of beginning.

The above described easement area encompasses 2,142 s.f.. All bearings refer to magnetic north as observed in 2018.

IV. MISCELLANEOUS PROVISIONS.

1. Amendments, Etc. No amendment, modification, or waiver of any provision of this Easement, or consent to any departure from the terms of this Easement by any party hereto shall be effective unless the same shall be in writing and signed by all the parties hereto, and then such waiver or consent shall be effective only in the specific instance and for the specific purpose for which given.

2. No Waiver; Remedies. No failure on the part of any party hereto to exercise, and no delay in exercising, any right hereunder shall operate as a waiver thereof, nor shall any single or partial exercise of any right hereunder preclude any other or further exercise thereof or the exercise of any other right. The remedies herein provided are cumulative and not exclusive of any remedies provided by law.

3. Successors and Assigns. This Easement shall be binding upon and inure to the benefit of the parties hereto and their respective successors and assigns.

4. Governing Law. This Easement shall be governed by, and construed in accordance with, the laws of the State of Maine, regardless of the law that might otherwise govern under applicable principles of conflict of laws thereof.

5. Entire Agreement. This Easement embodies the entire agreement and understanding of the parties hereto in respect of the subject matter hereof and supersedes all prior agreements, representations, warranties, and understandings between or among the parties with respect to such subject matter.

[SIGNATURE PAGES TO FOLLOW]

IN WITNESS WHEREOF, Timothy B. Bachelder has set his hand and seal this ____ day of _____, 2020.

WITNESS:

_____ _____

Timothy B. Bachelder

STATE OF MAINE
COUNTY OF CUMBERLAND, ss. _____, 2020

Then personally appeared before me, the above-named Timothy B. Bachelder, and acknowledged the foregoing instrument to be his free act and deed.

_____

Notary Public
Printed Name:
My Commission Expires:_____

IN WITNESS WHEREOF, the City of Westbrook has caused this instrument to be signed and sealed in its corporate name by Michael T. Foley, Mayor, duly authorized this ____ day of _____, 2020.

WITNESS: CITY OF WESTBROOK

_____ By:_____

Michael T. Foley
Title: Mayor

STATE OF MAINE
COUNTY OF CUMBERLAND, ss. _____, 2020

Then personally appeared before me, the above-named Michael T. Foley, Mayor of the City of Westbrook, and acknowledged the foregoing instrument to be his free act and deed and the free act and deed of the City of Westbrook.

_____
Notary Public
Printed Name:
My Commission Expires:_____

AFTER RECORDING RETURN TO:
Nicholas J. Morrill, Esq.
Jensen Baird Gardner & Henry
P.O. Box 4510
Portland, Maine 04112-4510

EASEMENT DEED

KNOW ALL PERSONS BY THESE PRESENTS that **GUY L. THOMPSON AND LAURIE P. THOMPSON**, whose address is 300 Cumberland Street, Westbrook, Maine 04092 (hereinafter "Grantor"), in consideration of One Dollar and other good and valuable consideration, the receipt of which is hereby acknowledged, paid by the **CITY OF WESTBROOK**, a Maine municipal corporation with a principal place of business and mailing address of 2 York Street, Westbrook, Maine 04092 (hereinafter "Grantee"), does hereby GIVE, GRANT, BARGAIN, SELL and CONVEY unto the said **CITY OF WESTBROOK**, its successors and assigns forever, a perpetual non-exclusive certain easement for the construction and maintenance of an ADA compliant sidewalk over a portion of Grantor's Property, as defined herein, located at the southeasterly corner of the intersection of Cumberland Street and Bridge Street in the City of Westbrook, Cumberland County, State of Maine, as depicted on a plan titled "Proposed Right-Of-Way Plan Intersection of Bridge Street and Cumberland Street of Rock Row, Westbrook, Maine for Waterstone Properties Group, Inc., 322 Reservoir Street, Needham, MA 02494" dated October 29, 2019 by Sebago Technics, Inc., Project Number 16278-06, which is on file with the City of Westbrook (the "Plan"), and being more particularly bounded and described as follows (the "Easement Area"):

A certain lot or parcel of land situated at the southeast corner of Cumberland Street and Bridge Street, in the City of Westbrook, County of Cumberland and State of Maine being more particularly described as follows:

Beginning at a point at the southeasterly intersection of Cumberland Street and Bridge Street, being N 33°38'07" E, a distance of 0.95 feet from an existing granite monument, broken, at grade;

Thence S 58°12'10" E, along the southwesterly sideline of Cumberland Street, a distance of 6.39 feet to a point;

Thence S 60°06'22" W, through land now or formerly of Guy L. Thompson and Laurie P. Thompson, as described in a deed recorded at the Cumberland County Registry of Deeds in Book 9380, Page 91, a distance of 12.84 feet to a point on the southeasterly sideline of Bridge Street;

Thence N 30°16'49" E, along the southeasterly sideline of Bridge Street, a distance of 11.30 feet to the Point of Beginning.

The easement described herein is for the construction and maintenance of proposed sidewalk improvements to provide ADA compliance.

The easement described herein contains approximately 36 square feet.

The Easement Area comprises a portion of Grantor's Property described in a Warranty Deed from Paul A. Severino dated June 26, 1987and recorded in the Cumberland County Registry of Deeds in Book 7853, Page 334, as affected by that Corrective Deed dated November 6, 1990 and recorded in the Cumberland County Registry of Deeds in Book 9380, Page 91(the "Grantor's Property").

A. The rights and easements granted herein are as follows:

1. The right of Grantee to enter the Easement Area and the Temporary Easement Area as depicted on the Plan, with people and machines, to construct, install and inspect sidewalk improvements to provide ADA compliance ("Sidewalk Improvements") within the Easement Area in the location depicted on the Plan. The Sidewalk Improvements shall be constructed up to the standards for a public sidewalk, to the satisfaction of the Grantee.

2. The right of Grantee to perform or have performed any necessary clearing, excavating, paving, reconstruction, and any other incidental work consistent with the above; provided, however, that prior to Grantee's undertaking any pavement cutting or pavement alteration, Grantee shall provide the Grantor reasonable advance written notice of such activity so that the parties may meet and confer about such activity before Grantee commences such activity.

3. Once Grantee commences construction activity, Grantee shall diligently pursue the same to completion. Upon completing its construction activity, Grantee shall promptly restore the Temporary Easement Area to its original condition to the extent reasonably possible, consistent with any and all restoration requirements specified by the City of Westbrook.

B. Notwithstanding anything to the contrary contained herein, the rights and easements herein granted are subject to the following:

1. The Grantor expressly reserves and retains the right to use, or to grant to others the right to use, the surface and subsurface of, and air space above, the areas subject to the rights and easements herein granted, provided that such use shall not materially interfere with, in Grantee's reasonable judgment, the exercise by Grantee of the rights and easements herein granted.

2. Whenever any work is performed by Grantee within the Easement Area and the Temporary Easement Area pursuant to the provisions of a right or easement granted hereunder, such work (i) shall be performed in a safe, diligent and workmanlike manner, at Grantee's sole cost and expense, in compliance with all applicable laws, ordinances, and regulations, including, without limitation, any and all requirements of the City of Westbrook regarding land use approvals; and (ii) shall be performed in a manner that causes the minimum of interference with the Grantor's use and enjoyment of the Temporary Easement Area and shall not unreasonably interfere with the Grantor's use of Grantor's Property.

Reserving to Grantor, its successors and assigns, the use and enjoyment of the Easement Area and Temporary easement Area for all purposes as are not inconsistent with and shall not materially interfere with the use thereof by Grantee, its successors and assigns, and others, for the purposes hereinabove described.

Grantee, for itself, its agents, employees, successors and assigns, covenants and agrees to release Grantor, its agents, employees, successors and assigns, from any and all damages, actions and causes of action, claims and demands of every kind and nature, whether known or unknown, in law or in equity, against Grantor, arising from or related to Grantee's use of the Easement Areas, which use is not inconsistent with this Easement Deed.

The right and easement conveyed herein and the terms and conditions thereof shall be binding upon and shall inure to the benefit of the parties hereto, and their respective successors and assigns.

The Grantee, at its own cost and expense, shall construct the Sidewalk Improvements, and any other reasonably related and permitted improvements located on the Easement Area. The Grantee shall maintain and repair the Easement Area once the Sidewalk Improvements are complete.

Grantor hereby agrees to indemnify, defend, and hold harmless the Grantee from all claims, demands, liabilities and suits of any nature whatever arising out of, because of or due to the breach of this easement deed by the Grantor, its employees, guests, customers or invitees, or due to any act, occurrence by the Grantor, its employees, guests, customers or invitees, or due to the use of the easement area by Grantor, its employees, guests, invitees or parishioners. It is specifically understood and agreed that this indemnification agreement does not cover the Grantee from its negligent act(s) or negligent omission(s), or from liability to the extent of insurance coverage maintained by the Grantee.

To the extent allowed by law, Grantee hereby agrees to indemnify, defend, and hold harmless the Grantor from all claims, demands, liabilities and suits of any nature whatever arising out of, because of or due to the breach of this easement deed by the Grantee, its employees, invitees, guests and the general public, or due to any act, occurrence or by the Grantee, its employees, invitees, guests and the general public, or due to the use of the easement area by the Grantee, its employees, invitees, guests and the general public. It is specifically understood and agreed that this indemnification agreement does not cover the Grantor from its negligent act(s) or negligent omission(s), or from liability to the extent of insurance coverage maintained by the Grantor.

Nothing in this easement deed is intended, or shall be construed, to constitute a waiver of any defense, immunity or limitation of liability that may be available to the Grantee or any of its officers, agents or employees, pursuant to the Eleventh Amendment to the Constitution of the United States of America, the Maine Constitution, the Maine Tort Claims Act (14 M.R.S.

Section § 8101 et seq.), any State of federal statute, the common law or any other privileges or immunities as may be provided by law.

IN WITNESS WHEREOF, Guy L. Thompson and Laurie P. Thompson have caused this instrument to be signed and sealed on this 22nd day of January, ~~2019.~~ 2020

Signed, Sealed and Delivered
in the Presence of:

Guy L. Thompson

Laurie P. Thompson

STATE OF MAINE
COUNTY OF CUMBERLAND, ss.

1/22, ~~2019~~ 2020

Personally appeared before me the above named Guy L. Thompson and Laurie P. Thompson and acknowledged the foregoing to be their free act and deed.

Notary Public/Attorney-at-Law
Printed Name:
Commission Expiration:

BRENDA W. PULEO
NOTARY PUBLIC
YORK COUNTY
MAINE
MY COMMISSION EXPIRES NOVEMBER 04, 2025

DOC :6465 BK:36399 PG:289
RECEIVED - RECORDED, CUMBERLAND COUNTY REGISTER OF DEEDS
02/04/2020, 10:53:23A
Register of Deeds Nancy A. Lane E-RECORDED

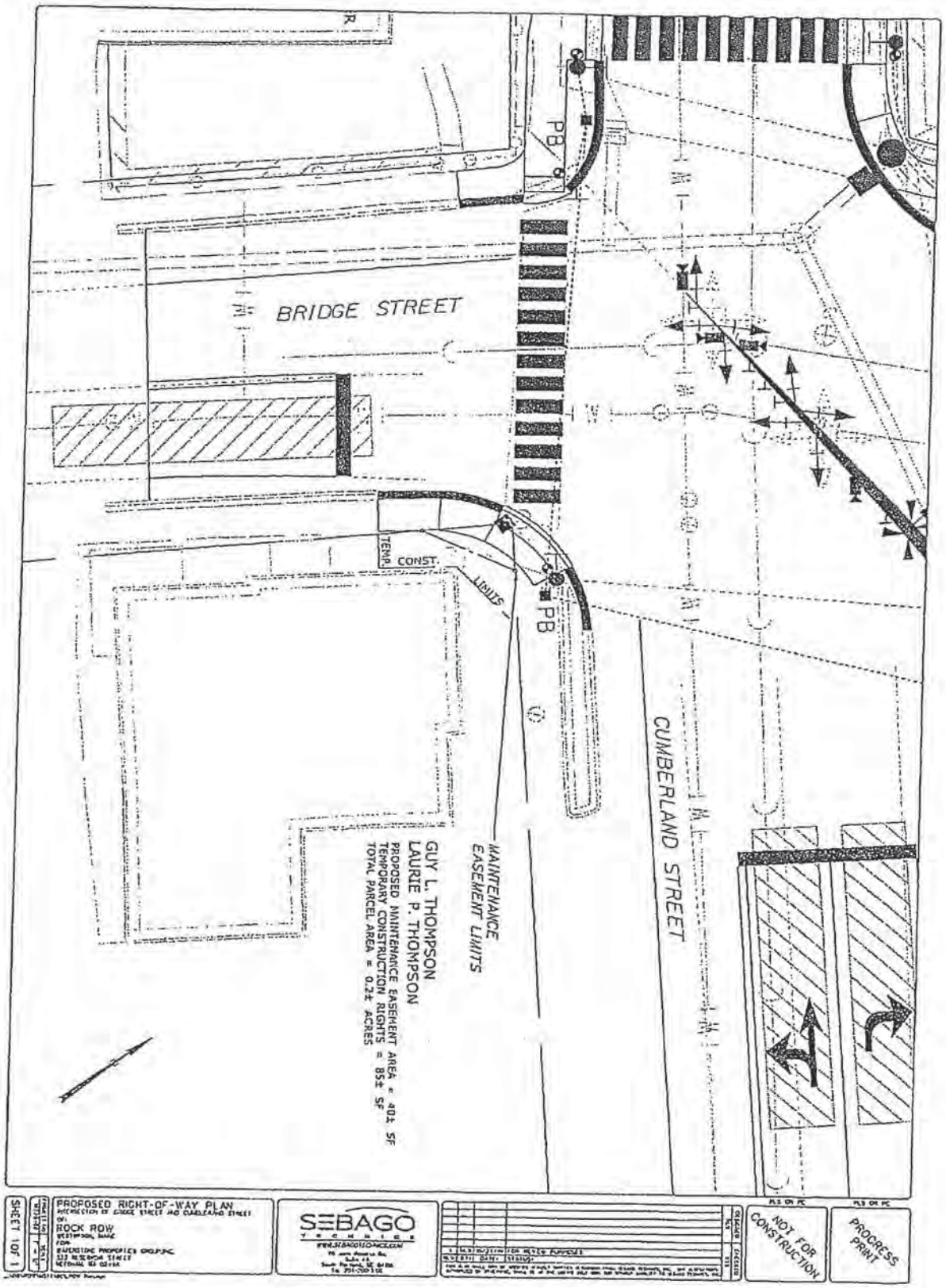

CITY OF WESTBROOK, MAINE

IN CITY COUNCIL

Date: August 3, 2020

Order: 2020-92

AUTHORIZING PURCHASE OF POLICE DESKS

That the Westbrook City Council hereby authorizes the purchase of two desks for the Police Department patrol room from TAB Office Systems of Saco, ME at a total cost of $1,541.00.

Funds available in budget line: 40003000-58900-C1935

First and Final Reading: August 3, 2020

Attest:

City Clerk

Mayor

CITY OF WESTBROOK, MAINE

2 York Street, Westbrook, ME 04092

REQUEST FOR COUNCIL ACTION

*Requests are due to the City Clerk two Fridays prior to a Council meeting. If expenditure/acceptance of funds is involved, Finance Department approval is required **prior** to submission.*

PROPOSED TITLE: Approve two (2) desk for police patrol renovation.

REQUESTED BY: Lieutenant David Thompson

DATE: 07/29/2020

SUMMARY:

The police department has started its renovation project to the patrol room. As part of the renovations, I am requesting approval to purchase two desks to replace the existing ones. I have researched several options and believe the following quote from TAB Office Systems for $1,541.00 is the best option for our needs.

QUOTATION FOR PRODUCTS AND SERVICES

Date: 7/27/2020 Quote Number: 72720a

QUOTATION PREPARED FOR:
Westbrook PD
Attn: Lt. David Thompson
570 Main Street
Westbrook ME, 04092
207-854-0644

PRESENTED BY:
Mike Cicio
TAB Office Systems
30 Spring Hill Road
Saco, ME 04072
Tel: 207-284-4432
Fax: 207-284-4439
mcicio@tabofficesystems.com

WE ARE PLEASED TO SUBMIT THE FOLLOWING QUOTATION

Line No.	Model Number/Description	Quantity	Unit Price	Unit	Ext. Price
1.00	66"x30" Full Modesty Laminate Desk w/ File Drawers	2	349.000		698.00
2.00	42"x20" Full Modesty Return Desk w/Hanging Drawer	2	259.000		518.00

3.00	Delivery & Install 325.00	1	325.000

COMMENTS:

Subtotal:	1,541.00
Freight:	
Total:	1,541.00

*Sales Tax will be automatically calculated on final invoice
www.tabofficesystems.com

Customer initiated delays in product delivery of more than two weeks will require a 50% deposit.
By executing below, the Customer certifies that the terms and conditions set forth below are correct and reflect the mutual agreement between TAB and the Customer. TAB is hereby duly authorized to provide product and/or services as outlined above to the Customer and the Customer agrees to pay TAB for such products and services.

The Police Administration respectfully askes for Council approval to purchase the two (2) desks from TAB Office Systems for the purchase price of $1,541.00. The funds for these desks are available in the CIP – C1935 approved line.

BUDGET LINES AFFECTED (IF APPLICABLE): ~~CIP – C1935~~ 4000 3000 - 58900-C1935

SMK OK

CITY OF WESTBROOK, MAINE

IN CITY COUNCIL

Date: August 3, 2020

Order: 2020-93

APPROVING ADMINISTRATIVE UPDATES TO THE DOWNTOWN FAÇADE IMPROVEMENT PROGRAM

That the Westbrook City Council hereby approves various administrative updates to the Downtown Façade Improvement Program as outlined in the attached exhibit.

First and Final Reading: August 3, 2020

Attest:

City Clerk

Mayor

CITY OF WESTBROOK, MAINE

2 York Street, Westbrook, ME 04092

REQUEST FOR COUNCIL ACTION

*Requests are due to the City Clerk two Fridays prior to a Council meeting. If expenditure/acceptance of funds is involved, Finance Department approval is required **prior** to submission.*

PROPOSED TITLE: Westbrook Facade Improvement Program updates

REQUESTED BY: Nancy Litrocapes

DATE: 07/07/2020

SUMMARY:

We are requesting Council to review the updated Westbrook Downtown Facade Improvement Program proposal for approval. There is no financial request from the Council at this time, though we have continued to receive inquiries from interested building and business owners in the Downtown in spite of Covid-19.

The proposed administrative updates include reorganization of the program Overview and Application, elimination of redundancies, clarification of program intent and provide a logical framework of the program.

The program has been administered and managed within City Hall since November, 2019, which has provided for a streamlined experience for the applicant.

BUDGET LINES AFFECTED (IF APPLICABLE):

Westbrook, Maine
ECONOMIC DEVELOPMENT

Daniel Stevenson
Economic Development Director
2 York Street
Westbrook, Maine 04092
Phone: 207-591-8101

City of Westbrook
Downtown Façade Improvement Program

Program Navigator:
Nancy Litrocapes, Economic Development Specialist
Westbrook City Hall
2 York Street
Westbrook, ME 04092
nlitrocapes@westbrook.me.us
Cell: 207-671-5313

Overview

1. **Program Summary**

   The City of Westbrook~~, in partnership with Discover Downtown Westbrook,~~ administers the Downtown Façade Improvement Program to provide financial assistance to downtown businesses and property owners who wish to make physical improvements to the exterior of their buildings. The program is designed to create visual improvements in the downtown (see ~~"Area 1"~~ ~~Downtown District Heart on~~ attached map for eligible area).

   The funds are dispersed to projects with a visual impact on a first-come, first-served basis by the date received, provided the activities meet the ~~criteria~~ eligibility ~~listed~~ below. ~~Eligible projects will have a positive visual impact in the Downtown District Heart, and shall meet the criteria listed below. Applications which are complete and project-ready shall receive funding priority. Applications may be submitted online (preferred) at LINK mailed or delivered to the Economic Development Office at City Hall (address in application).~~ Submit completed application to the Economic Development Department at City Hall (address above).

   The Downtown Façade Improvement Program funds cover any amount up to $15,000 per-project award with a dollar for dollar match ratio up to $30,000 total project cost. These funds can be used for a variety of façade improvement activities listed in the "Eligible Projects" section ~~below~~.

Any contract for project construction/services is between the business/property owner and the contractor(s). The grant is a reimbursement to the applicant and in no way binds the City to the work performed.

Façade Improvement Program funds are available on an ongoing basis until existing funds are exhausted.

2. Administration

The ~~Westbrook~~ Economic Development Department ~~Office~~ ~~& Discover Downtown Westbrook~~ will review grant applications for approval. (T~~t~~he Village Review Committee/~~Department of~~ Planning Department ~~and Code Enforcement~~ may review if façade improvement project ~~to~~ meets ordinance threshold criteria.~~)~~ The work performed under approved projects shall conform to all federal, state and local codes, and applicants are responsible for acquiring all necessary permits.

3. Program Guidelines and Eligibility

a. ~~Façade Improvement Program funds are available on an on-going basis until existing funds are exhausted.~~ The grant applicant shall be either the property owner or tenant. A tenant shall have the property owner's signed approval of the proposed building improvements.

b. ~~Maximum award is $15,000.~~ Building owner shall provide proof of ownership. Tenant shall provide proof of current, signed rental/lease.

c. ~~Grants are available for up to 50% of the total cost (as defined in the application) of the improvement project and shall be matched at a ratio of 1 to 1. No other City funding will count toward match.~~ All property taxes are current.

d. ~~The grant applicant may be the property owner or tenant. A tenant must have the property owner's signed approval of the proposed building improvements. No more than one matching grant per building will be awarded within a 60-day period.~~ d. A Downtown Façade Improvement Program grant may only be made to any property in the downtown as delineated on the Downtown Façade Improvement map and has at least one street level, front facing commercial use.

e. ~~Building owner shall provide proof of ownership.~~ Grant funds will be paid directly to program applicants only upon completion of the project(s).

f. ~~All City real and personal property taxes due have been paid current.~~ Grant funds cannot be used towards City permit fees or design costs.

g. ~~A Downtown Façade Improvement Program grant may only be made to any property in the downtown as delineated on the Downtown Façade Improvement map and has at least one commercial use within it~~. All projects shall be completed within one (1) year of award. A request for an extension may be granted, if delay is due to a legitimate cause. Written request for extension shall occur before the 1-year deadline has elapsed.

h. ~~Grant funds will be paid directly to each contractor performing improvements only upon completion and inspection of their portion of the project.~~ The applicant shall submit three bids for their proposal(s). Two bids are acceptable provided the applicant can demonstrate attempts for a third bid were unsuccessful.

i. ~~Grant funds cannot be used towards City permit fees.~~ Contractor(s) and sub-contractor(s) shall be insured and are required to sign a lien waiver upon completion of work.

~~j. All projects must be completed within one (1) year of award. A request for an extension may be granted, if delay is due to a legitimate cause. Request for extension must occur before the one-year deadline has elapsed.~~

~~k. The applicant must receive three bids for their proposal. Further details may be found in Required Documentation on Application Page 2.~~

~~l. Contractor(s) and subcontractors shall be insured and are required to sign a lien waiver.~~

j. An applicant may apply consecutively provided the project(s) meet(s) program eligibility and is not duplicative.

4. Eligible Projects

All proposed improvements ~~must~~ shall comply with code and design review requirements. Please review the City of Westbrook Land Use Ordinance Section 403 Village Review Overlay Zone for architectural standards (specifically, Section 403.7 Downtown District Regulations, depending on the ~~subject~~ property's location within the Zone).

a. Signage
b. Awnings
c. Storefront improvements
d. Restoration of original/historic windows, doors, and trim where applicable
e. Repair or replacement of windows, doors, and trim
f. Cleaning and/or painting of surfaces
g. Cleaning and/or repointing of surface brick or stone
h. Removing paint from brick or stone
i. Exterior lighting
j. Removal of "modernization" ~~efforts and/or inappropriate non-historic~~ alterations/additions
k. Cleaning and repair or installation of approved siding

~~l. Roofing visible from nearby street-level~~

l. Landscapes/hardscapes
m. Increased accessibility for ADA compliance ~~(on street frontage)~~
n. Interior leasehold improvements may be eligible for applicant match if the improvements are part of larger project that includes exterior façade improvements. In such a project,

no less than 50% of applicant's funds shall be spent on exterior improvements. For example, if $1,000 of applicant's funds were matched by $1,000 of City funds, a minimum of $500 of applicant's funds shall be spent only on exterior work.

o. **Other**, ~~please~~ explain how the proposed project fits in the spirit of the program

5. Ineligible Projects

~~The following may in no way be City-funded as part of the Façade Improvement Program:~~

a. Purchase of commercial property/equipment
b. New building construction
c. Routine maintenance
d. Interior improvement (unless they meet the criteria of 4o.)

6. ~~Application~~ Process

~~a.~~ To apply for a Downtown Façade Improvement Program grant, access and thoroughly read the Westbrook Downtown Façade Improvement Program Overview and Application materials~~. complete the application online (preferred) at LINK OR mail or deliver to the Economic Development Office at City Hall (address in application). Include available drawings and descriptive information on the design of the project and products to be used.~~

~~b. Provide both material and labor cost estimates from at least three bidders for each item (see Application form for more details).~~ Collect estimates and other required documentation as per the Self-Check Pathway. This will include contacting the Planning Department to review your project and determine the necessary permits.

~~c. The City of Westbrook Economic Development Department and Discover Downtown Westbrook team will review each application for approval. Decisions will be announced within two weeks of receipt of application. c. The City reserves the right to reject incomplete applications or those projects which do not meet the criteria of the program.~~ Create and submit a packet of all required documentation.

~~d. One building may receive multiple façade improvement grants, provided each is dedicated to separate business storefronts. However, no more than one matching grant per building will be awarded within a 60-day period.~~ The City's Economic Development staff will review applications for approval.

~~e. Successful applicants may begin improvements after receiving official grant award notification. No improvements begun prior to award notification will be eligible for reimbursement. Additionally, projects that require City permits (Building, Electrical, Village Review, Signs, etc.) must be applied for and granted prior to any work commencing. If work proceeds without the required City permits, City will withdraw the~~

~~Façade Improvement grant funds. Please set up an appointment with the Codes Office to review your project and determine the necessary permits for your project.~~ The applicant will be contacted with a decision within two weeks of receipt of application in the form of a grant award letter. (The City reserves the right to reject incomplete applications or the projects that do not meet the criteria of the program.)

~~f. Contract(s) for construction services is between the business/property owner and the contractor(s). The grant is a reimbursement to the contractor and in no way binds the City to the work performed. Upon completion of the project, the business/property owner shall submit invoices from the contractor(s) for work completed. Property owner, and business owner if applicable, must sign a statement that all work has been completed to their satisfaction.~~ Successful applicants may begin improvements after receiving grant award letter**. Improvements begun prior to award notification may not be eligible for reimbursement. Additionally, projects that require City permits (Building, Electrical, Village Review, Signs, etc.) shall be applied for and granted prior to any work commencing. If work proceeds without the required City permits, the City may withdraw the Façade Improvement grant funds.**

~~g. The City of Westbrook Economic Development Department and Discover Downtown Westbrook review team will complete an inspection to determine that the work was completed in accordance with the original grant application and cost estimates. Cost overruns above estimated cost (stated grant amount) are solely the responsibility of the business/property owner.~~

g. ~~Payment is made directly to the contractor(s) within 30 days after final inspection and signed statement (see f, above).~~ After overall project completion, the following documents shall be submitted to Economic Development staff:

- W-9
- Contractor(s) invoices
- Proof of payment in full to contractor(s)
- Signed lien waiver(s)

h. City will process payment after all final documentation is submitted.

NOTE: Cost overruns above estimated cost (stated grant amount) shall be communicated to the City for consideration and increased approval award.

NOTE: City of Westbrook reserves the right to make payment to contractor(s) only under special circumstances communicated between the applicant and the City in advance.

City of Westbrook
Downtown Façade Improvement Program
Application

1. Name of Applicant: _____

2. Please check one: ____ Property Owner ____ Tenant
~~(See "Required Documentation" list on Application p. 2)~~

3. Business Name (if applicable): _____

4. Property Address: _____

5. Mailing Address (if different from above): _____

6. Daytime Phone: _____ 7. Email: _____

8. ~~Description of the project (see "Eligible Projects" list on program overview~~
Required documentation:

a. ~~Please~~ Provide a brief written description of each proposed activity, accompanied by materials to be used. (For example: (1) Paint entire street facade with 3 colors, a base wall color, a trim color and an accent color (2) Remove existing internally illuminated sign and replace with a new sign.) Attach additional sheets as necessary. Note: All projects must comply with Code and Village Review requirements. **Facade grant award letter will not be issued until you have contacted the Department of Planning and Code Enforcement to determine if your project requires permits.**

_____

_____

_____

_____

b. ~~Please~~ Attach a current color photo of where each proposed activity will take place. ~~as well as design sketch(es) showing what it should look like when finished, if applicable. Please include any information that will help in the processing of your application (see "Required Documentation" list on Application p. 2).~~

c. Attach design sketch(es) showing what the project(s) will look like when finished. Depending on the project(s) this could include an elevation view of the facades, a site plan showing alterations or other graphics of the proposed work.

d. Business tenants will attach a copy of their signed lease. Property owners will attach a copy of proof of ownership (deed).

e. Provide three estimates, per project, from qualified insured contractors clearly indicating the cost breakdown for labor and materials.

f. Be sure your contractor(s) provide(s) specific details in their estimates so the scope of work and cost is evident. (See program Overview document).

g. If your preferences are NOT the lowest bidder(s), provide documentation (email, letter) explaining your rationale for why each is the most responsive and responsible choice.

9. Total Estimated Cost of Improvements: _____
~~On a separate page, provide a cost breakdown for labor and material, based on the estimate(s) from qualified and insured contractor(s) for each proposed activity, selected from at least three bids (see "Required Documentation" list on Application p. 2).~~

10. ~~Funding~~ Total Grant Amount Requested, based on 1:1 dollar match up to 15,000 maximum:
_____
~~Source and Amount of Matching Funds: _____~~

11. *I have read and understand the attached Program Overview ~~and Guidelines~~. I understand that this is a matching grant program and that the money is granted on a reimbursement basis, following completion of work. I also understand that improvements not pre-approved by the Westbrook Economic Development Department will not be funded.*

_____ _____
Applicant's Signature Date

12. Property Owner's Acknowledgement (if Applicant is a Tenant)
I am the Property Owner of the above address. I have been informed of the Applicant's intention to perform the improvements described in the attached documentation, and I hereby approve the proposed improvements.

_____ _____
Property Owner's Signature Date

13. Property Owner's Contact Information (if different from Applicant)

Full Name: _____ Daytime Phone: _____

Address: _____

Email: _____

~~**Required Documentation:**~~

a. ~~Business tenants must provide a copy of their lease. Property owners must provide proof of ownership.~~
b. ~~Provide a cost breakdown for labor and material, based on three estimates from qualified and insured contractors for each proposed activity. Three estimates are required to encourage quality and value. Then, provide a detailed estimate from your chosen contractor along with an explanation for why this is the lowest responsible and responsive estimate.~~
c. ~~Elevation view of facades, site plan showing alterations or other graphics of the proposed improvements.~~

Please submit your completed application ~~along with Required Documentation~~ to Economic Development Specialist, Nancy Litrocapes, via email at nlitrocapes@westbrook.me.us , snail mail or bring to:

City of Westbrook
Attn: Nancy Litrocapes, Department of Economic Development
2 York Street
Westbrook, Maine 04092

Facade Improvement Grant applications are accepted on a rolling basis until current funds are exhausted. Applicants will be notified of a decision within two weeks of receipt of application.

We look forward to serving your business!

CITY OF WESTBROOK, MAINE

IN CITY COUNCIL

Date: August 3, 2020

Order: 2020-94

AUTHORIZING REALLOCATION OF FUNDS FOR COUNTY ROAD PUMP STATION PROJECT

That the Westbrook City Council hereby authorizes the transfer of $83,000 from the Sewer Capital Projects Surplus account to the County Road Pump Station project account to cover additional costs associated with completion of the project.

Funds available in 48003250-58900-B1704

First Reading: August 3, 2020 Second and Final Reading:

Attest:

City Clerk Mayor

CITY OF WESTBROOK, MAINE

2 York Street, Westbrook, ME 04092

REQUEST FOR COUNCIL ACTION

*Requests are due to the City Clerk two Fridays prior to a Council meeting. If expenditure/acceptance of funds is involved, Finance Department approval is required **prior** to submission.*

PROPOSED TITLE: Request to Authorize Transfer of Funds to County Road PS Project

REQUESTED BY: Katherine Kelley

DATE: 07/16/2020

SUMMARY:

The Department of Engineering & Public Services requests authorization to transfer funds from the Sewer Surplus Account to the County Road Pump Station project to cover additional costs to finish the project. These costs include costs such as hiring a third part inspector to perform density tests, contract modifications, grading of drainage swale in City right-of-way and installation of pavers to allow pump station access via the City's vacuum truck. The request is to transfer $83,000.00 of surplus funds to the account listed below.

Contract Modification #1	$42,941.91
Inspection Services - RW Gillespie & SW Cole	$6,803.19
Grading & Paver Installation - Shaw Brothers	$27,186.26
Hoist for Pumps - Tri-State Hoist	$5,535.00
Hayes Pump - Pump Work	$102.50

BUDGET LINES AFFECTED (IF APPLICABLE):

Sewer Surplus Account, 48003250 58900 B1704

SECTION 00842

CHANGE ORDER

Change Order No. 1

Date of Issuance:	4/1/2020	Effective Date:	4/1/2020
Owner:	City of Westbrook	Owner's Contract No.:	
Contractor:	Penta Corporation	Contractor's Project No.:	
Engineer:	Wright-Pierce	Engineer's Project No.:	13698B
Project:	County Road Pump Station Upgrade	Contract Name:	

The Contract is modified as follows upon execution of this Change Order:

Description: Compilation of all approved change orders to date.

Attachments: *PCO-01, PCO-02R, PCO-04R2 and PCO-08*

CHANGE IN CONTRACT PRICE	**CHANGE IN CONTRACT TIMES** *[note changes in Milestones if applicable]*
Original Contract Price: $ 1,471,750.00	Original Contract Times: Substantial Completion: October 31, 2019 Ready for Final Payment: November 30, 2019 days or dates
[Increase] [Decrease] from previously approved Change Orders No. __ to No. __: $ N/A	[Increase] [Decrease] from previously approved Change Orders No. __ to No. __: Substantial Completion: N/A Ready for Final Payment: N/A days
Contract Price prior to this Change Order: $ 1,471,750.00	Contract Times prior to this Change Order: Substantial Completion: ____ Ready for Final Payment: ____ days or dates
[Increase] [~~Decrease~~] of this Change Order: $ 42,941.91	[Increase] [Decrease] of this Change Order: Substantial Completion: ____ Ready for Final Payment: ____ days or dates
Contract Price incorporating this Change Order: $ 1,514,691.91	Contract Times with all approved Change Orders: Substantial Completion: October 31, 2019 Ready for Final Payment: November 30, 2019 days or dates

RECOMMENDED:	ACCEPTED:	ACCEPTED:
By:	By: Katherine L. Kelley	By:
Engineer (if required)	Owner (Authorized Signature)	Contractor (Authorized Signature)
Title: Project Manager	Title Wastewater Division Manager	Title PROJECT MANAGER
Date: 4/1/2020	Date 4/1/2020	Date 4.2.20

EJCDC
ENGINEERS JOINT CONTRACT DOCUMENTS COMMITTEE

SECTION 00842

CHANGE ORDER

Change Order No. 1

Date of Issuance:	4/1/2020	Effective Date:	4/1/2020
Owner:	City of Westbrook	Owner's Contract No.:	
Contractor:	Penta Corporation	Contractor's Project No.:	
Engineer:	Wright-Pierce	Engineer's Project No.:	13698B
Project:	County Road Pump Station Upgrade	Contract Name:	

The Contract is modified as follows upon execution of this Change Order:

Description: Compilation of all approved change orders to date.

Attachments: *PCO-01, PCO-02R, PCO-04R2 and PCO-08*

CHANGE IN CONTRACT PRICE	**CHANGE IN CONTRACT TIMES** *[note changes in Milestones if applicable]*
Original Contract Price: $ 1,471,750.00	Original Contract Times: Substantial Completion: October 31, 2019 Ready for Final Payment: November 30, 2019 days or dates
[Increase] [Decrease] from previously approved Change Orders No. ___ to No. ___: $ N/A	[Increase] [Decrease] from previously approved Change Orders No. ___ to No. ___: Substantial Completion: N/A Ready for Final Payment: N/A days
Contract Price prior to this Change Order: $ 1,471,750.00	Contract Times prior to this Change Order: Substantial Completion: ____ Ready for Final Payment: ____ days or dates
[Increase] [~~Decrease~~] of this Change Order: $ 42,941.91	[Increase] [Decrease] of this Change Order: Substantial Completion: ____ Ready for Final Payment: ____ days or dates
Contract Price incorporating this Change Order: $ 1,514,691.91	Contract Times with all approved Change Orders: Substantial Completion: October 31, 2019 Ready for Final Payment: November 30, 2019 days or dates

RECOMMENDED:	ACCEPTED:	ACCEPTED:
By:	By: Katherine L. Kelley	By:
Engineer (if required)	Owner (Authorized Signature)	Contractor (Authorized Signature)
Title: Project Manager	Title Wastewater Division Manager	Title
Date: 4/1/2020	Date 4/1/2020	Date

CITY OF WESTBROOK
COUNTY ROAD PUMP STATION UPGRADE
Summary of Change Order Items

	Items Approved
	Items Under Discussion

No.	Description	Value	Days	PCO Date	Approved Date
	Change Order No. 1				
PCO-01	Credit for Removing Bypass Road Crossing	$ (10,316.25)	0	5/22/2019	5/28/2019
PCO-02R	Changes to Control Panel	$ 1,670.73	0	7/30/2019	
PCO-04R2	Added Shoring	$ 48,838.80	TBD		
PCO-08	Communications Building Electric	$ 2,748.63	0		
	Subtotal for C.O. No. 1:	**$ 42,941.91**	**TBD**		
	Change Order No. 2				
1					
2					
	Subtotal for C.O. No. 2:	**$ -**			
	Balancing Unit Price Items				
1045	Additional Select Fill (Line Item 2)	tbd			
1050	Additional Screened Stone (Line Item 3)	tbd			
1055	Additional Earthwork Excavation and Disposal (Line Item 4)	tbd			
1060	Utility Service Charges	tbd			
	Subtotal for Balancing Unit Price Items:	$ -			

Total Executed Change Orders to Date:	$	42,941.91
% of Original Contract Value:		2.9%
Total Change Orders and Balancing Unit Items:	$	42,941.91
% of Original Contract Value:		2.9%
Original Contract Value:	$	1,471,750.00
Final Contract Value:	**$**	**1,514,691.91**

Penta Corporation
PO Box 390
Moultonboro, NH 03254

PROPOSAL #:
1903-01

Proposal Submitted To: Wright Pierce		Phone: 207.761.2991	5/22/2019
Street: 75 Washington Avenue, Suite 202		Job Name: County Road Pump Station Upgrade	
City, State & Zip Code: Portland, ME 04101		Job Location: Westbrook, ME	
Engineer: Wright-Pierce	Date of Plans: Dec-18	Submitted By: Scott Shuman	Job Phone: 603.476.5525 x20

We hereby submit proposed specifications and estimate for:

Credit for deletion of road crossing trench for temporary bypass force main.

Shaw Brothers Const.	Delete Road Crossing	$	(9,825.00)
	GC OH&P @ 5%		(491.25)
		TOTAL:	(10,316.25)

We propose hereby to furnish material and labor complete in accordance with above specifications, for the sum of:

$ (10,316.25)

All material is guaranteed to be as specified.All work is to be completed in a workmanlike manner according to standard practices. Any alteration or deviation from above specifications involving extra costs will be executed only upon written orders, and will become an extra charge over and above the estimate. All agreements contingent upon strikes, accidents or delays beyond our control. Owner to carry fire, tornado and other necessary insurance. Our workers are fully covered by Workman's Compensation Insurance.

Authorized Signature:_____

NOTE: This proposal may be withdrawn by us if not accepted within 30 calendar days.

Acceptance of Proposal- The above prices, specifications and conditions are satisfactory and are hereby accepted. You are authorized to do the work as specified. Payment will be made as outlined above.

Date of Acceptance 5/28/2019

Signature: Katherine L. Kelley

Signature:_____

Bid Estimate Worksheet

Shaw Brothers Construction, Inc.
341 Mosher Road, PO Box 69
Gorham, Maine 04038
Phone: 207-839-2552
Fax: 207-839-6239

Change Request - Additional Bypass Manhole

Project:	**County Road Pump Station**
	Westbrook
Owner:	City of Westbrook
Gen Cont.:	Penta Corporation
Date:	May17, 2019
Notes:	Delete one bypass piping trench across County Road

Bid Items

Item	Quantity	Unit	Price	Total
Street Trench Pavement: 210 sf				
18" MDOT Type D	-12	cy	$ 35.00	$ (420.00)
3" MDOT Type A	-2	cy	$ 50.00	$ (100.00)
Finegrade	-23	sy	$ 15.00	$ (345.00)
3.5" 12.5MM HMA	-4	ton	$ 175.00	$ (700.00)
Tack	-0.5	gal	$ 20.00	$ (10.00)
Temp Bypass				
6" Bypass	-50	lf	$ 165.00	$ (8,250.00)
				$
				$
				$
				$
				$
				$
				$
				$
				$
				$
			Bid Total	**$ (9,825.00)**

Clarifications/Exclusions:

All federal, state, and local permits, and fees are not included.

Penta Corporation
PO Box 390
Moultonboro, NH 03254

PROPOSAL #:
1903-02R

Proposal Submitted To: Wright Pierce		Phone: 207.761.2991	7/30/2019
Street: 75 Washington Avenue, Suite 202		Job Name: County Road Pump Station Upgrade	
City, State & Zip Code: Portland, ME 04101		Job Location: Westbrook, ME	
Engineer: Wright-Pierce	Date of Plans: Dec-18	Submitted By: Scott Shuman	Job Phone: 603.476.5525 x20

We hereby submit proposed specifications and estimate for:

Revised Pump Control Panel in accordance with EC-3.

Milliken Bros. Co. see attachment	Provide AB PLC equipment	$	1,601.12
	GC OH&P @ 5%		69.61
	TOTAL:	$	1,670.73

We propose hereby to furnish material and labor complete in accordance with above specifications, for the sum of:

$ 1,670.73

All material is guaranteed to be as specified.All work is to be completed in a workmanlike manner according to standard practices. Any alteration or deviation from above specifications involving extra costs will be executed only upon written orders, and will become an extra charge over and above the estimate. All agreements contingent upon strikes, accidents or delays beyond our control. Owner to carry fire, tornado and other necessary insurance. Our workers are fully covered by Workman's Compensation Insurance.

Authorized Signature:_____

NOTE: This proposal may be withdrawn by us if not accepted within 30 calendar days.

Acceptance of Proposal- The above prices, specifications and conditions are satisfactory and are hereby accepted. You are authorized to do the work as specified. Payment will be made as outlined above.

Date of Acceptance _____

Signature:_____

Signature:_____

Milliken Brothers, Inc.
Electrical Contractors
474 Riverside Industrial Parkway
Portland, Maine 04103
Telephone (207) 797-8375
Facsimile (207) 797-0895
E-mail: mbi@millikenbrosinc.com

July 18, 2019

Scott Shuman
Penta Corporation
1253 Whittier Highway
Moultonboro, NH 03254
O: 603-476-5525
C: 603-393-7325

RE: County Road Pump Station, Westbrook, ME

Allen Bradley Equipment Costs	$1392.28
Overhead and Profit 15%	$208.84
Total Change	$1601.12

Please let me know of any questions or concerns.

Regards,

Shawn Henderson

Shawn Henderson
Estimator – Project Manager

Cc Jeff Milliken

HORIZON SOLUTIONS

Find the Horizon Solutions branch location nearest you by visiting
www.HorizonSolutions.com/Locations
or by calling us at 1-800-724-4750.

NH Bragg is now a division of Horizon Solutions.

QUOTE NO.	4966221-00		
DATE	07/17/19	EXPIRES	07/30/19
CUSTOMER NO.	17780	PAGE	1

SOLD TO
MILLIKEN BROTHERS, INC.
474 RIVERSIDE INDUSTRIAL PKWY
PORTLAND, ME 04103-1493

QUOTATION

SPECIAL INSTRUCTIONS

EST DELIVERY	07/17/19	ATTN	
FREIGHT	PREPAID AND ALLOWED		
TERMS	1.5%10TH NET		
REFERENCE			
SHIP VIA	Local PHDI		

SHIP TO
MILLIKEN BROTHERS, INC.
474 RIVERSIDE INDUSTRIAL PKWY
PORTLAND, ME 04103-1493

SHIPPING WAREHOUSE
HORIZON Solutions LLC
Northeastern Industrial Park
Building 28, Bay 2
Guilderland Center, NY 12085

SALES CONTACT	Jack Dean
CONTACT PHONE NO.	207-991-5420/6328
CONTACT FAX NO.	207-941-2334
JOB	ARSC
PO NO.	CNTY RD PUMP STATION

LINE	PART NO. / DESCRIPTION	CUSTOMER PART NO.	QUANTITY	UOM	PRICE	PRICE UOM	EXTENDED
1	A-B2080LC5024QWB MICRO850 24 I/O ETHERNET/IP CONTROLLER Estimated Delivery Date: 07/17/19		1	EA	472.00	EA	472.00
2	A-B2080MEMBAKRTC MICRO800 MEMORY MODULE WITH RTC PLUG-IN Estimated Delivery Date: 07/17/19		1	EA	105.00	EA	105.00
3	A-B2085IQ16 MICRO800 16 POINT DIGITAL INPUT MODULE Estimated Delivery Date: 07/17/19		1	EA	150.00	EA	150.00
4	A-B2085IF8 MICRO800 8 POINT ANALOG INPUT MODULE Estimated Delivery Date: 07/17/19		1	EA	411.00	EA	411.00
6	A-B2085OF4 MICRO800 4 POINT ANALOG OUTPUT MODULE Estimated Delivery Date: 07/17/19		1	EA	238.00	EA	238.00

Continued

TOTAL

HORIZON SOLUTIONS

Find the Horizon Solutions branch location nearest you by visiting
www.HorizonSolutions.com/Locations
or by calling us at 1-800-724-4750.

NH Bragg is now a division of Horizon Solutions.

QUOTE NO.	4966221-00		
DATE	07/17/19	EXPIRES	07/30/19
CUSTOMER NO.	17780	PAGE	2

SOLD TO
MILLIKEN BROTHERS, INC.
474 RIVERSIDE INDUSTRIAL PKWY
PORTLAND, ME 04103-1493

QUOTATION

SPECIAL INSTRUCTIONS

EST DELIVERY	07/17/19	ATTN	
FREIGHT	PREPAID AND ALLOWED		
TERMS	1.5%10TH NET		
REFERENCE			
SHIP VIA	Local PHDI		

SHIP TO
MILLIKEN BROTHERS, INC.
474 RIVERSIDE INDUSTRIAL PKWY
PORTLAND, ME 04103-1493

SHIPPING WAREHOUSE
HORIZON Solutions LLC
Northeastern Industrial Park
Building 28, Bay 2
Guilderland Center, NY 12085

SALES CONTACT	Jack Dean
CONTACT PHONE NO.	207-991-542076328
CONTACT FAX NO.	207-941-2334
JOB	ARSC
PO NO.	CNTY RD PUMP STATION

LINE	PART NO. / DESCRIPTION	CUSTOMER PART NO.	QUANTITY	UOM	PRICE	PRICE UOM	EXTENDED
7	A-B2085ECR MICRO800 EXPANSION MODULE END CAP Estimated Delivery Date: 07/17/19		1	EA	16.28	EA	16.28
6	Lines Total				Total		1392.28

Due to volatile market prices and tariffs, all quotations are subject to review when an order is placed. Acceptance of order is subject to approval by Horizon Solutions Credit Department. Material returns are subject to inspection by Horizon and if approved for credit, may be subject to restocking charges. Order cancellations for non-stock products may be subject to cancellation charges. Configured, custom or modified products are non-cancellable and non-returnable. This quotation is our interpretation of the available information at the time of the quotation. It is the responsibility of the customer to confirm this bill of material. We are pleased to submit this quotation based on our standard Terms and Conditions which can be found at: www.hs-e.com/resources/terms-conditions

Last Page

TOTAL 1392.28

Penta Corporation **PO Box 390** **Moultonboro, NH 03254**			**PROPOSAL #:** 1903-04R2
Proposal Submitted To: Wright Pierce		Phone: 207.761.2991	3/30/2020
Street: 75 Washington Avenue, Suite 202		Job Name: County Road Pump Station Upgrade	
City, State & Zip Code: Portland, ME 04101		Job Location: Westbrook, ME	
Engineer: Wright-Pierce	Date of Plans: Dec-18	Submitted By: Scott Shuman	Job Phone: 603.476.5525 x20

We hereby submit proposed specifications and estimate for:

Additional shoring and excavation required to install 12" cross connection line and valve between wetwells.
Work required due to unknown subsurface obstruction.

$ 48,838.80

Schedule impact and additional contract time required due to this requirement will be reviewed at a later date.
This content of this proposal is not intended limit our claim for additional contract time.

We propose hereby to furnish material and labor complete in accordance with above specifications, for the sum of:

$ 48,838.80

All material is guaranteed to be as specified.All work is to be completed in a workmanlike manner according to standard practices. Any alteration or deviation from above specifications involving extra costs will be executed only upon written orders, and will become an extra charge over and above the estimate. All agreements contingent upon strikes, accidents or delays beyond our control. Owner to carry fire, tornado and other necessary insurance. Our workers are fully covered by Workman's Compensation Insurance.

Authorized
Signature:_____

NOTE: This proposal may be withdrawn by us if not accepted within 30 calendar days.

Acceptance of Proposal- The above prices, specifications and conditions are satisfactory and are hereby accepted. You are authorized to do the work as specified. Payment will be made as outlined above.

Date of Acceptance _____

Signature:_____

Signature:_____

Scott Shuman

From: Scotty Linscott [scotty@hbfleming.com]
Sent: Monday, November 11, 2019 2:45 PM
To: Scott Shuman
Cc: Richard McLeod
Subject: RE: County Rd

Hi Scott,
I can get down to $47,000.00. Does that work?

Let me know.

Also, we should be able to get a crane there late this week or early next to get back at it.

Thanks,
Scotty

From: Scotty Linscott
Sent: Friday, September 13, 2019 11:37 AM
To: Scott Shuman <smshuman@roadrunner.com>
Cc: Richard McLeod <rmcleod@hbfleming.com>
Subject: County Rd

Hi Scott,
The cost to design, furnish, install and leave in place the sheetpile connector cofferdam comes out to $54,200.00.

I have attached a sketch showing the proposed location of the cofferdam.

Let me know if you have any questions.

Best,

"Scotty" John S. Linscott IV
H.B. Fleming, inc.
O-207-799-8514
C-207-749-1187

Scott Shuman

From: Scotty Linscott [scotty@hbfleming.com]
Sent: Friday, September 13, 2019 11:37 AM
To: Scott Shuman
Cc: Richard McLeod
Subject: County Rd
Attachments: county rd.pdf

Hi Scott,
The cost to design, furnish, install and leave in place the sheetpile connector cofferdam comes out to $54,200.00.

I have attached a sketch showing the proposed location of the cofferdam.

Let me know if you have any questions.

Best,

"Scotty" John S. Linscott IV
H.B. Fleming, inc.
O-207-799-8514
C-207-749-1187

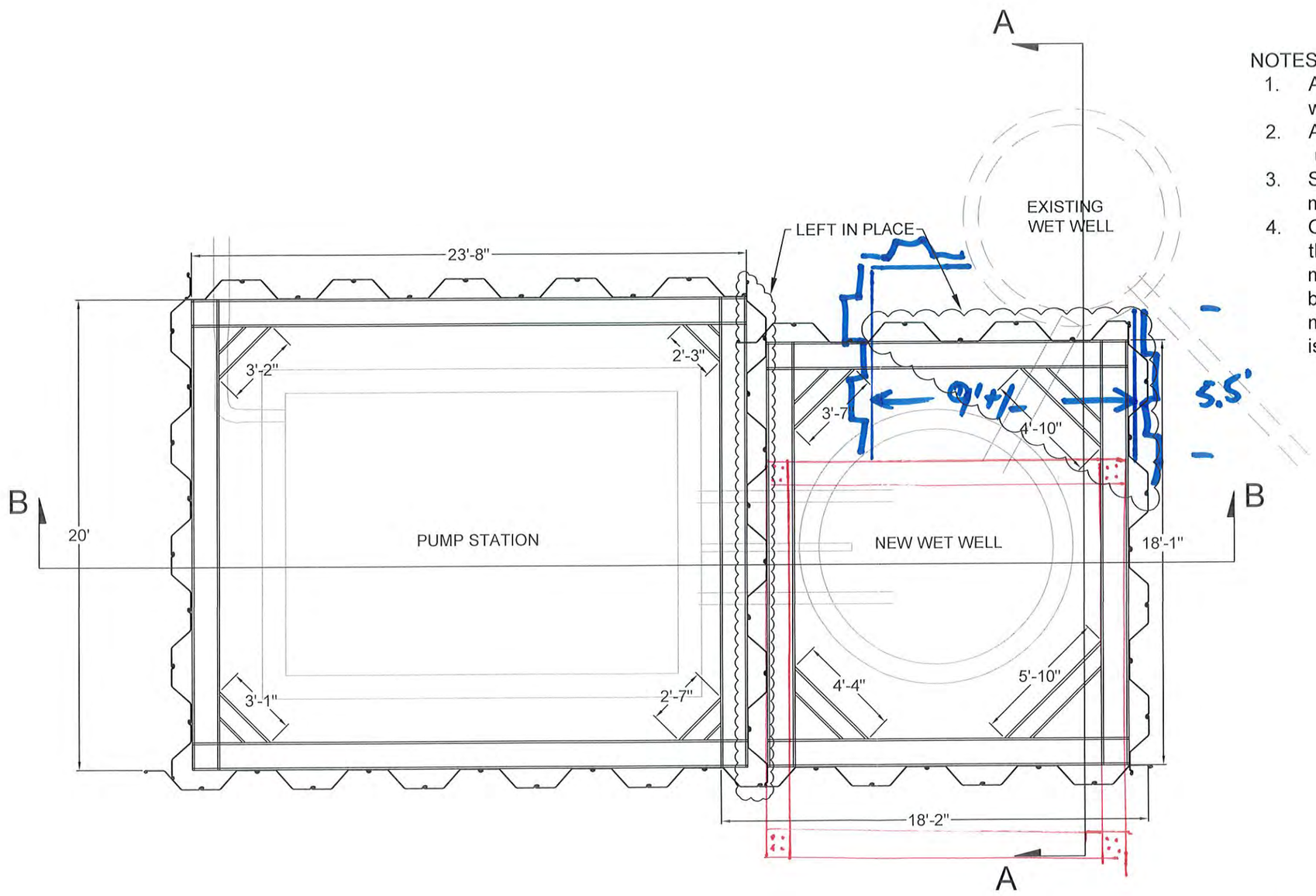

PLAN VIEW
SCALE: 1 " = 5'

NOTES:

1. All sheetpiles, wales, and corner braces will be ASTM A572 Gr. 50 material
2. All welds will be made by certified welders using E70XX electrodes
3. Sheetpiles will have a minimum section modulus of 10.1 in^3/ft
4. One monitoring point will be set on each wall of the wet well cofferdam. These points will be monitored during each stage of the cofferdam bracing installation. Once excavation is complete, monitoring will continue until no wall movement is observed for two weeks.

CONSTRUCTION PROCEDURE:

1. Drive sheets as shown on plans
2. Excavate within cofferdam #1 to first level of bracing
3. Install first level of bracing
4. Repeat steps 2 & 3 for subsequent three levels of bracing
5. Excavate to bottom of excavation
6. Install subgrade material
7. Install precast wetwell
8. Backfill cofferdam #1 while removing bracing
9. Excavate within cofferdam #2 to first level of bracing
10. Install first level of bracing
11. Excavate to second level of bracing
12. Install second level of bracing
13. Excavate to bottom of excavation
14. Install subgrade material (by others)
15. Install precast pump station
16. Backfill cofferdam #2 while while removing bracing
17. Pull sheets

CONNECTOR COFFERDAM

REVISED WET WELL COFFERDAM

H.B. FLEMING
89 PLEASANT AVENUE
SO. PORTLAND, ME 04106
P: 207-799-8514 F: 207-799-8538
www.hbfleming.com

TITLE: Pump Station Cofferdam	
PROJECT: County Road Pump Station	
LOCATION: Westbrook, ME	
DATE: 6/7/2019	
SCALE: AS NOTED	REVISION:

Bid Estimate Worksheet

Shaw Brothers Construction, Inc.
341 Mosher Road, PO Box 69
Gorham, Maine 04038
Phone: 207-839-2552
Fax: 207-839-6239

Change Request - 1142-02 Additional Excavation

Project:	**County Road Pump Station**
	Westbrook
Owner:	**City of Westbrook**
Const. Mgr.:	**Penta**
Date	**September 11, 2019**
Notes:	**Provide labor, equipemnt and materials to excavate and backfill a 4' x 8' x 20' deep additional area as requested in an email dated 9/11/19**

Item	Quantity	Unit	Price	Total
Foreman	14.00	hr	$ 110.00	$ 1,540.00
Siteworker	21.00	hr	$ 50.00	$ 1,050.00
78,000# Excavator with clamshell attachment	14.00	hr	$ 350.00	$ 4,900.00
18 cy Dump Truck	14.00	hr	$ 95.00	$ 1,330.00
Fwd/Rev Compactor	6.00	hr	$ 25.00	$ 150.00
Granular Borrow Backfill	35.00	cy	$ 9.00	$ 315.00
Excavation Disposal Fee	35.00	cy	$ 5.00	$ 175.00
				$ -
			Lump Sum	**$ 9,460.00**

Replace Unsuitables

Penta Corporation
PO Box 390
Moultonboro, NH 03254

PROPOSAL #:
1903-08

Proposal Submitted To: Wright Pierce		Phone: 207.761.2991	2/10/2020
Street: 75 Washington Avenue, Suite 202		Job Name: County Road Pump Station Upgrade	
City, State & Zip Code: Portland, ME 04101		Job Location: Westbrook, ME	
Engineer: Wright-Pierce	Date of Plans: Dec-18	Submitted By: Scott Shuman	Job Phone: 603.476.5525 x20

We hereby submit proposed specifications and estimate for:

Costs and delay associated with necessary relocation of Consolidated Communications fiber optic

T&M costs associated with relocation of UG electrical service for the Consolidated Communications building at the County Road Pumpng Station site.

Milliken Brothers, Inc. (see attached)	Relocate Electric Service	$	~~6,798.00~~	$2617.75
	GC OH&P @ 5%		~~295.56~~	$130.89
		TOTAL: $	~~7,093.56~~	$2,748.63

We propose hereby to furnish material and labor complete in accordance with above specifications, for the sum of: $2,748.43
$ ~~**7,093.56**~~

All material is guaranteed to be as specified.All work is to be completed in a workmanlike manner according to standard practices. Any alteration or deviation from above specifications involving extra costs will be executed only upon written orders, and will become an extra charge over and above the estimate. All agreements contingent upon strikes, accidents or delays beyond our control. Owner to carry fire, tornado and other necessary insurance. Our workers are fully covered by Workman's Compensation Insurance.

Authorized Signature:_____

NOTE: This proposal may be withdrawn by us if not accepted within 30 calendar days.

Acceptance of Proposal- The above prices, specifications and conditions are satisfactory and are hereby accepted. You are authorized to do the work as specified. Payment will be made as outlined above.

Date of Acceptance _____

Signature:_____

Signature:_____

Milliken Brothers, Inc.
Electrical Contractors
474 Riverside Industrial Parkway
Portland, Maine 04103
Telephone (207) 797-8375
Facsimile (207) 797-0895
E-mail: mbi@millikenbrosinc.com

February 6, 2020

Scott Shuman
Penta Corporation
1253 Whittier Highway
Moultonboro, NH 03254
O: 603-476-5525
C: 603-393-7325

RE: County Road Pump Station, Westbrook, ME
Relocate electric service for phone company building

Material Costs		~~$800.21~~	$597.30
Journeyman	~~16 @ $68.50 per hour~~	~~$1096.00~~	$0.00
Foreman	~~55 @ $73.00 per hour~~	~~$4015.00~~	23 @ $73.00 per hour = $1,679.00
Subtotal		~~$5911.21~~	Subtotal $2,276.30
Overhead and Profit 15%		~~$886.68~~	Overhead & Profit 15% $341.45
Total Change		~~$6798.00~~	Total Change $2,617.75

Please let me know of any questions or concerns.

Regards,

Shawn Henderson

Shawn Henderson
Estimator – Project Manager

Cc Jeff Milliken

From: Jeff Milliken <jeff@millikenbrosinc.com>
Sent: Tuesday, February 25, 2020 10:42 AM
To: Katherine Kelley <KKelley@westbrook.me.us>; smshuman@roadrunner.com
Cc: 'Shawn Henderson' <shawn@millikenbrosinc.com>
Subject: FW: Electrical Service T&M Charges

Katherine and Scott,
We mistakenly failed to track the actual time and material related to this added scope and compounded that oversight by submitting the incorrect cost summary. We accept $2,617.75 as compensation and extend our apologies for the way this was handled. Please be assured any future T&M changes will be properly documented on a daily basis.
Should questions arise please let us know.
Regards,
Jeff

Jeffrey C Milliken
President
Milliken Bros Inc
474 Riverside Industrial Parkway
Portland, Me 04103
O 207-797-8375
F 207-797-0895
C 207-232-1958

INVOICE

GraybaR.

29 WEST COMMERCIAL ST
PORTLAND ME 04101-4631

Invoice Questions Please Call or Email
207-517-8600 or ARQuestions@graybar.com

Invoice No: **9313767833**
Invoice Date: 12/19/2019
Account Number: 0000170997
Account Name: MILLIKEN BROS

Remit Payments To:
GRAYBAR ELECTRIC COMPANY
PO BOX 414426
BOSTON MA 02241-4426

MILLIKEN BROS
474 RIVERSIDE IND PARK
PORTLAND ME 04103-1430

Ship to:
MILLIKEN BROS
MILLIKEN BROTHERS INC
COUNTY ROAD PUMP STATION
120 COUNTY ROAD
WESTBROOK ME 04092

Order No: 12846-SH-PHONE CO						SO#: 370311100
Del. Doc. #:	PRO #	Routing	Date Shipped	Shipped From	F.O.B.	Rt. To
8029710188		GRAYBAR	12/19/2019	PORTLAND, ME	S/P - F/A	
Signed For By: NSA LEFT ITEM BY TRAILER						

Quantity	Catalog # / Description	Unit Price / Unit	Amount
100	PVC-2 GENERIC VENDOR-PVCPA 2 SCH40 COND 10FT	55.77 / 100	55.77

NSA

GK
SH
1/16/20

Terms of Payment

1% 10th Prox., net 15th Prox.

As a condition of the sales agreement, a monthly service charge of the lesser of 1-1/2% or the maximum permitted by law may be added to all accounts not paid by net due date. Visa, MasterCard, American Express, and Discover credit cards are accepted at point of purchase only.

Sub Total	55.77
Freight	0.00
Handling	0.00
Tax	0.00
Total Due	55.77
Cash Discount (if paid within terms)	-0.56

SUBJECT TO THE STANDARD TERMS AND CONDITIONS LISTED ON WWW.GRAYBAR.COM.

INVOICE

GraybaR.

29 WEST COMMERCIAL ST
PORTLAND ME 04101-4631

Invoice Questions Please Call or Email
207-517-8600 or ARQuestions@graybar.com

Invoice No: **9313767832**
Invoice Date: 12/19/2019
Account Number: 0000170997
Account Name: MILLIKEN BROS

Remit Payments To:
GRAYBAR ELECTRIC COMPANY
PO BOX 414426
BOSTON MA 02241-4426

MILLIKEN BROS
474 RIVERSIDE IND PARK
PORTLAND ME 04103-1430

Ship to:
MILLIKEN BROS
MILLIKEN BROTHERS INC
COUNTY ROAD PUMP STATION
120 COUNTY ROAD
WESTBROOK ME 04092

Order No: 12846-SH-PHONE CO						SO#: 370311100
Del. Doc. #:	PRO #	Routing	Date Shipped	Shipped From	F.O.B.	Rt. To
8029711132	8029710188	GRAYBAR	12/18/2019	ZONE-TAUNTON,MA	S/P - F/A	

Signed For By: NSA LEFT ITEM BY TRAILER

Quantity	Catalog # / Description	Unit Price / Unit	Amount
2	ELL-45-2 GENERIC VENDOR-PVCPA SCH40 2IN 45DEG ELBOW	122.02 / 100	2.44
2	ELL-90-2 GENERIC VENDOR-PVCPA SCH40 2IN 90DEG ELBOW	128.84 / 100	2.58
6	COUP-2 GENERIC VENDOR-PVCPA 2 SCH40 COUPLING	32.46 / 100	1.95
2	FA-2 GENERIC VENDOR-PVCPA 2 FEMALE ADAPTER	46.32 / 100	0.93
1	CEMENT-REG BODY-CLR-PT GENERIC VENDOR-PVCPA NA / 7210602 / G30346S / 55904 / NA	393.90 / 100	3.94
405	XHHW-2-1-STR-BLK-CUT REEL GENERIC VENDOR WIRE-WYRPA 600V CU 3 X 135 FEET	1167.43 / 1000	472.81

NSA

OK SH 1/08/20

Terms of Payment
1% 10th Prox., net 15th Prox.

As a condition of the sales agreement, a monthly service charge of the lesser of 1-1/2% or the maximum permitted by law may be added to all accounts not paid by net due date. Visa, MasterCard, American Express, and Discover credit cards are accepted at point of purchase only.

Sub Total	484.65
Freight	0.00
Handling	0.00
Tax	0.00
Total Due	484.65
Cash Discount (if paid within terms)	-4.85

SUBJECT TO THE STANDARD TERMS AND CONDITIONS LISTED ON WWW.GRAYBAR.COM.

INVOICE

GraybaR.

29 WEST COMMERCIAL ST
PORTLAND ME 04101-4631

Invoice Questions Please Call or Email
207-517-8600 or ARQuestions@graybar.com

Invoice No: **9313813612**
Invoice Date: 12/23/2019
Account Number: 0000170997
Account Name: MILLIKEN BROS

Remit Payments To:
GRAYBAR ELECTRIC COMPANY
PO BOX 414426
BOSTON MA 02241-4426

MILLIKEN BROS
474 RIVERSIDE IND PARK
PORTLAND ME 04103-1430

Ship to:
MILLIKEN BROS
MILLIKEN BROTHERS INC
WESTBROOK PUMP
120 COUNTY ROAD
WESTBROOK ME 04092

Order No: 12846-SH						SO#: 370341496
Del. Doc. #:	PRO #	Routing	Date Shipped	Shipped From	F.O.B.	Rt. To
8029754970		GRAYBAR	12/20/2019	ZONE-TAUNTON,MA	S/P - F/A	

Signed For By: NSA LEFT ITEM ON SITE

Quantity	Catalog # / Description	Unit Price / Unit	Amount
1	42-251 IDEAL INDUSTRIES INC 6-IN RED ELEC BURIED	99.70 / 1	99.70

NSA

Contract work

OK
SH
1/8/20

Terms of Payment

1% 10th Prox., net 15th Prox.

As a condition of the sales agreement, a monthly service charge of the lesser of 1-1/2% or the maximum permitted by law may be added to all accounts not paid by net due date. Visa, MasterCard, American Express, and Discover credit cards are accepted at point of purchase only.

Sub Total	99.70
Freight	0.00
Handling	0.00
Tax	0.00
Total Due	99.70
Cash Discount (if paid within terms)	-1.00

SUBJECT TO THE STANDARD TERMS AND CONDITIONS LISTED ON WWW.GRAYBAR.COM.

INVOICE

GraybaR.

29 WEST COMMERCIAL ST
PORTLAND ME 04101-4631

Invoice Questions Please Call or Email
207-517-8600 or ARQuestions@graybar.com

Invoice No: **9313813613**
Invoice Date: 12/23/2019
Account Number: 0000170997
Account Name: MILLIKEN BROS

Remit Payments To:
GRAYBAR ELECTRIC COMPANY
PO BOX 414426
BOSTON MA 02241-4426

MILLIKEN BROS
474 RIVERSIDE IND PARK
PORTLAND ME 04103-1430

Ship to:
MILLIKEN BROS
MILLIKEN BROTHERS INC
WESTBROOK PUMP
120 COUNTY ROAD
WESTBROOK ME 04092

Order No: 12846-SH						SO#: 370341496
Del. Doc. #:	PRO #	Routing	Date Shipped	Shipped From	F.O.B.	Rt. To
8029754988	8029754970	GRAYBAR	12/20/2019	ZONE-TAUNTON,MA	S/P - F/A	
Signed For By: NSA LEFT ITEM ON SITE						

Quantity	Catalog # / Description	Unit Price / Unit	Amount
1	2-GALV-COUP GENERIC VENDOR-TUBPA 2-GALVANIZED RIGID COUPLING	335.29 / 100	3.35
1	CPR26 COOPER CROUSE-HINDS DIVISION 2 RGD CMP CPL	3225.23 / 100	32.25

NSA

Contract work

OK
SH
1/08/20

Terms of Payment
1% 10th Prox., net 15th Prox.

As a condition of the sales agreement, a monthly service charge of the lesser of 1-1/2% or the maximum permitted by law may be added to all accounts not paid by net due date. Visa, MasterCard, American Express, and Discover credit cards are accepted at point of purchase only.

Sub Total	35.60
Freight	0.00
Handling	0.00
Tax	0.00
Total Due	35.60
Cash Discount (if paid within terms)	-0.36

SUBJECT TO THE STANDARD TERMS AND CONDITIONS LISTED ON WWW.GRAYBAR.COM.

INVOICE

GraybaR.

29 WEST COMMERCIAL ST
PORTLAND ME 04101-4631

Invoice Questions Please Call or Email
207-517-8600 or ARQuestions@graybar.com

Invoice No: **9313902382**
Invoice Date: 12/31/2019
Account Number: 0000170997
Account Name: MILLIKEN BROS

Remit Payments To:
GRAYBAR ELECTRIC COMPANY
PO BOX 414426
BOSTON MA 02241-4426

MILLIKEN BROS
474 RIVERSIDE IND PARK
PORTLAND ME 04103-1430

Ship to:
MILLIKEN BROS
MILLIKEN BROTHERS INC
COUNTY ROAD PUMP STATION
120 COUNTY ROAD
WESTBROOK ME 04092

Order No: 12846-SH-PHONE CO						SO#: 370382565
Del. Doc. #:	PRO #	Routing	Date Shipped	Shipped From	F.O.B.	Rt. To
8029816598		GRAYBAR	12/31/2019	PORTLAND, ME	S/P - F/A	
Signed For By: NSA LEFT ITEM ON SITE						

Quantity	Catalog # / Description	Unit Price / Unit	Amount
100	PVC-2 GENERIC VENDOR-PVCPA 2 SCH40 COND 10FT	55.77 / 100	55.77

NA

Contract work

ok
SH
1/9/20

Terms of Payment
1% 10th Prox., net 15th Prox.

As a condition of the sales agreement, a monthly service charge of the lesser of 1-1/2% or the maximum permitted by law may be added to all accounts not paid by net due date. Visa, MasterCard, American Express, and Discover credit cards are accepted at point of purchase only.

Sub Total	55.77
Freight	0.00
Handling	0.00
Tax	0.00
Total Due	55.77
Cash Discount (if paid within terms)	-0.56

SUBJECT TO THE STANDARD TERMS AND CONDITIONS LISTED ON WWW.GRAYBAR.COM.

INVOICE

GraybaR.

29 WEST COMMERCIAL ST
PORTLAND ME 04101-4631

Invoice Questions Please Call or Email
207-517-8600 or ARQuestions@graybar.com

Invoice No: **9313902381**
Invoice Date: 12/31/2019
Account Number: 0000170997
Account Name: MILLIKEN BROS

Remit Payments To:
GRAYBAR ELECTRIC COMPANY
PO BOX 414426
BOSTON MA 02241-4426

MILLIKEN BROS
474 RIVERSIDE IND PARK
PORTLAND ME 04103-1430

Ship to:
MILLIKEN BROS
MILLIKEN BROTHERS INC
COUNTY ROAD PUMP STATION
120 COUNTY ROAD
WESTBROOK ME 04092

Order No: 12846-SH-PHONE CO						SO#: 370382565
Del. Doc. #:	PRO #	Routing	Date Shipped	Shipped From	F.O.B.	Rt. To
8029816866	8029816598	GRAYBAR	12/30/2019	ZONE-TAUNTON,MA	S/P - F/A	

Signed For By: NSA LEFT ITEM ON SITE

Quantity	Catalog # / Description	Unit Price / Unit	Amount
2	ELL-45-2 GENERIC VENDOR-PVCPA SCH40 2IN 45DEG ELBOW	122.02 / 100	2.44
2	ELL-90-2 GENERIC VENDOR-PVCPA SCH40 2IN 90DEG ELBOW	128.84 / 100	2.58
6	COUP-2 GENERIC VENDOR-PVCPA 2 SCH40 COUPLING	32.46 / 100	1.95
2	FA-2 GENERIC VENDOR-PVCPA 2 FEMALE ADAPTER	46.32 / 100	0.93
1	CEMENT-REG BODY-CLR-PT GENERIC VENDOR-PVCPA NA / 7210602 / G30346S / 55904 / NA	393.90 / 100	3.94

NA

Contract work

OK
SH
1/8/20

Terms of Payment
1% 10th Prox., net 15th Prox.

As a condition of the sales agreement, a monthly service charge of the lesser of 1-1/2% or the maximum permitted by law may be added to all accounts not paid by net due date. Visa, MasterCard, American Express, and Discover credit cards are accepted at point of purchase only.

Sub Total	11.84
Freight	0.00
Handling	0.00
Tax	0.00
Total Due	11.84
Cash Discount (if paid within terms)	-0.12

SUBJECT TO THE STANDARD TERMS AND CONDITIONS LISTED ON WWW.GRAYBAR.COM.

O'Reilly AUTO PARTS
PROFESSIONAL PARTS PEOPLE

14 COUNTY RD
GORHAM, ME 04038
(207) 839-2096
www.oreillyauto.com

Store hours:
Mon-Sat: 07:30 AM-07:00 PM
Sun: 09:00 AM-06:00 PM

Counter #: 19288
Date: 12/20/2019 10:57 AM Drawer: 3
Invoice #: 4550-356268

AFZ RV 5.99 T
RV ANTIFRZE
30 DAY LIMITED WARRANTY

AFZ RV 5.99 T
RV ANTIFRZE
30 DAY LIMITED WARRANTY

AFZ RV 5.99 T
RV ANTIFRZE
30 DAY LIMITED WARRANTY

3 Items

Sub-Total	17.97
Sales Tax	.99
Total	18.96
DB 1082	18.96

DB XXXXXXXXXXXX1082 Auth CD: 396302

O'Reilly AUTO PARTS
PROFESSIONAL PARTS PEOPLE

14 COUNTY RD
GORHAM, ME 04038
(207) 839-2096
www.oreillyauto.com

Store hours:
Mon-Sat: 07:30 AM-07:00 PM
Sun: 09:00 AM-06:00 PM

Counter #: 15851 KYLE
Date: 12/20/2019 08:49 AM Drawer: 3
Invoice #: 4550-356238

AFZ RV 17.97 T
RV ANTIFRZE 3 @ 5.99 EA
30 DAY LIMITED WARRANTY

3 Items

Sub-Total	17.97
Sales Tax	.99
Total	18.96
DB 1082	18.96

DB XXXXXXXXXXXX1082 Auth CD: 166612
REF# 543163664904

Verified by PIN

12-8-46

O'Reilly AUTO PARTS
PROFESSIONAL PARTS PEOPLE

14 COUNTY RD
GORHAM, ME 04038
(207) 839-2096
www.oreillyauto.com

Store hours:
Mon-Sat: 07:30 AM-07:00 PM
Sun: 09:00 AM-06:00 PM

Counter #: 15851 KYLE
Date: 01/14/2020 10:32 AM Drawer: 3
Invoice #: 4550-359016

AFZ RV 17.97 T
RV ANTIFRZE 3 @ 5.99 EA
30 DAY LIMITED WARRANTY

3 Items

Sub-Total 17.97
Sales Tax .99
Total 18.96

DB 1082 18.96

DB XXXXXXXXXXXX1082 Auth CD: 218038
REF# 143780965770

474 Riverside Industrial Parkway
Portland, ME 04103

Fiber optic work

WEEKLY PAYROLL

Job# 12846

County road pump station

Week ending 12/22/19

Name of Employee	Classification	Monday S	Monday O	Monday D	Tuesday S	Tuesday O	Tuesday D	Wednesday S	Wednesday O	Wednesday D	Thursday S	Thursday O	Thursday D	Friday S	Friday O	Friday D	Saturday S	Saturday O	Saturday D	Sunday S	Sunday O	Sunday D	TOTAL HOURS S	TOTAL HOURS O	TOTAL HOURS D	TOTAL HOURS ALL	NOTES
Jeff Baillargeon	F													5.5									5.5	-	-	5.5	
Nate Belanger	J													5.5									5.5	-	-	5.5	
																							-	-	-	-	
																							-	-	-	-	
																							-	-	-	-	
																							-	-	-	-	
																							-	-	-	-	
																							-	-	-	-	
																							-	-	-	-	
																							-	-	-	-	
																							-	-	-	-	
																							-	-	-	-	
																							-	-	-	-	
																							-	-	-	-	
																							-	-	-	-	
																							11.0	-	-	11.0	Total Hours
																										-	CF

474 Riverside Industrial Parkway
Portland, ME 04103

Contract work - Generator building

WEEKLY PAYROLL

Job# 12846

County road pump station

Week ending 1/5/20

Name of Employee	Classification	Monday S	Monday O	Monday D	Tuesday S	Tuesday O	Tuesday D	Wednesday S	Wednesday O	Wednesday D	Thursday S	Thursday O	Thursday D	Friday S	Friday O	Friday D	Saturday S	Saturday O	Saturday D	Sunday S	Sunday O	Sunday D	TOTAL HOURS S	TOTAL HOURS O	TOTAL HOURS D	TOTAL HOURS ALL	NOTES
		REPORT ALL TIME AS HOURS WORKED, NOT HOURS PAID																									
Jeff Baillargeon	F										8.0			8.0									16.0	-	-	16.0	
Dan Laflamme	J										8.0			8.0									16.0	-	-	16.0	
																							-	-	-	-	
																							-	-	-	-	
																							-	-	-	-	
																							-	-	-	-	
																							-	-	-	-	
																							-	-	-	-	
																							-	-	-	-	
																							-	-	-	-	
																							-	-	-	-	
																							-	-	-	-	
																							-	-	-	-	
																							-	-	-	-	
																							-	-	-	-	
																							32.0	-	-	32.0	Total Hours
																										-	CF

474 Riverside Industrial Parkway
Portland, ME 04103

Contract work - generator building

WEEKLY PAYROLL

Job# 12846

County road pump station

Week ending 1/12/20

Name of Employee	Classification	REPORT ALL TIME AS HOURS WORKED, NOT HOURS PAID																					TOTAL HOURS				NOTES
		Monday			Tuesday			Wednesday			Thursday			Friday			Saturday			Sunday							
		S	O	D	S	O	D	S	O	D	S	O	D	S	O	D	S	O	D	S	O	D	S	O	D	ALL	
Jeff Baillargeon	F	8.0			8.0																		16.0	-	-	16.0	
																							-	-	-	-	
																							-	-	-	-	
																							-	-	-	-	
																							-	-	-	-	
																							-	-	-	-	
																							-	-	-	-	
																							-	-	-	-	
																							-	-	-	-	
																							-	-	-	-	
																							-	-	-	-	
																							-	-	-	-	
																							-	-	-	-	
																							-	-	-	-	
																							-	-	-	-	
																							-	-	-	-	
																							16.0	-	-	16.0	Total Hours
																										-	CF

474 Riverside Industrial Parkway
Portland, ME 04103

Pole Repair - OK

WEEKLY PAYROLL

Job# 12846

County road pump station

Week ending 1/19/20

Name of Employee	Classification	Monday S	Monday O	Monday D	Tuesday S	Tuesday O	Tuesday D	Wednesday S	Wednesday O	Wednesday D	Thursday S	Thursday O	Thursday D	Friday S	Friday O	Friday D	Saturday S	Saturday O	Saturday D	Sunday S	Sunday O	Sunday D	TOTAL HOURS S	TOTAL HOURS O	TOTAL HOURS D	TOTAL HOURS ALL	NOTES
Jeff Baillargeon	F							4.0			8.0												12.0	-	-	12.0	
																							-	-	-	-	
																							-	-	-	-	
																							-	-	-	-	
																							-	-	-	-	
																							-	-	-	-	
																							-	-	-	-	
																							-	-	-	-	
																							-	-	-	-	
																							-	-	-	-	
																							-	-	-	-	
																							-	-	-	-	
																							-	-	-	-	
																							-	-	-	-	
																							-	-	-	-	
																							-	-	-	-	
																							12.0	-	-	12.0	Total Hours
																										-	CF

Bid Estimate Worksheet

Shaw Brothers Construction, Inc.
341 Mosher Road, PO Box 69
Gorham, Maine 04038
Phone: 207-839-2552
Fax: 207-839-6239

Cost Proposal - Vac Truck Turning

Project: **County Road Pump Station**
Westbrook
Owner: City of Westbrook
Gen Cont.: Penta Corporation
Date: July 2, 2019

Notes: Furnish labor, equipment and materials to install a permeable paver area to accommodate the vacuum truck as detailed on sketch provided via email on 6/26/19.

Bid Items

Item	Quantity	Unit	Price	Total
Prep, Grade, Drainage and Curb Labor				
Foreman	20	hr	$ 110.00	$ 2,200.00
Siteworker	30	hr	$ 50.00	$ 1,500.00
Cat 322 RT Excavator	20	hr	$ 220.00	$ 4,400.00
18 cy Dump Truck	10	hr	$ 95.00	$ 950.00
Fwd/Rev Compactor	10	hr	$ 35.00	$ 350.00
Materials				$ -
12" HDPE Pipe	30	lf	$ 12.00	$ 360.00
12" Cap	1	ea	$ 45.00	$ 45.00
3/4" Crushed Stone Delivered	19	cy	$ 24.00	$ 456.00
Geotextile Fabric	48	sy	$ 1.35	$ 64.80
Gravel Type B (3")	1.36	cy	$ 20.00	$ 27.20
Gravel Type D (18")	8.17	cy	$ 18.00	$ 147.06
				$ -
Subs				$ -
Genest XL Permeable Pavers	432	sf	$ 20.45	$ 8,834.40
Flaggers (work at edge of roadway)	10	hr	$ 35.00	$ 350.00
				$ -
Paving				$ -
19mm HMA (2")	1.8	tn	$ 300.00	$ 540.00
9.5mm HMA (1.25")	1.12	tn	$ 300.00	$ 336.00
				$ -
			Bid Total	**$ 20,560.46**

Clarifications/Exclusions:

All federal, state, and local permits, and fees are not included.
Granite curb to be supplied (to the project site) by the City of Westbrook
Increased area above 432 square feet for pavers and 147 square feet for pavement will be an additional cos
Granite curb edging to only be required where pavers abut grass/lawn area
Work to be performed while Shaw Brothers is onsite for the pump station sitework. Additional mobilizations have not been included
Pole to be moved by others and is not included in this cost estimate

Bid Estimate Worksheet

	Item	Quantity	Unit	Price	Total

Bid Estimate Worksheet

Shaw Brothers Construction, Inc.
341 Mosher Road, PO Box 69
Gorham, Maine 04038
Phone: 207-839-2552
Fax: 207-839-6239

Cost Proposal - Swale, Rip Rap and Drip Strip

Project: **County Road Pump Station**
Westbrook
Owner: City of Westbrook
Gen Cont.: Penta Corporation
Date: July 1, 2020

Notes: Furnish labor, equipment and materials to install a paved swale with rip rap downspout as well as a roof line drip strip per the attached sketch.

Bid Items

Item	Quantity	Unit	Price	Total
Prep, Grade, Rip Rap and Drip Strip Labor				
Foreman	10	hr	$ 110.00	$ 1,100.00
Siteworker	20	hr	$ 50.00	$ 1,000.00
Cat 322 RT Excavator	10	hr	$ 220.00	$ 2,200.00
14 cy Dump Truck	8	hr	$ 90.00	$ 720.00
Fwd/Rev Compactor	2	hr	$ 35.00	$ 70.00
Materials				$ -
3" - 6" Rip Rap Delivered (12")	4	cy	$ 28.00	$ 112.00
Geotextile Fabric	28	sy	$ 1.35	$ 37.80
Gravel Type B (3")	2	cy	$ 20.00	$ 40.00
Gravel Type D (18")	10	cy	$ 18.00	$ 180.00
3/4" Crushed Stone Delivered	3	cy	$ 24.00	$ 72.00
4" Drip Strip Aluminum Edging	60	lf	$ 2.75	$ 165.00
4" Drip Strip Edging Corner	4	ea	$ 13.50	$ 54.00
				$ -
Paving				$ -
19mm HMA (2")	2.15	tn	$ 250.00	$ 537.50
9.5mm HMA (1.25")	1.35	tn	$ 250.00	$ 337.50
				$ -
			Bid Total	**$ 6,625.80**

Clarifications/Exclusions:
All federal, state, and local permits, and fees are not included.
See attached sketch for work limits

R.W. Gillespie & Associates, Inc.
20 Pomerleau Street, Suite 100
Biddeford, ME 04005-
Tel: 207-286-8008 Fax: 207-710-0000
jgraunke@rwg-a.com
www.rwgillespie.com

Invoice

Accounts Payable
City of Westbrook
2 York Street
Westbrook, ME 04092

Invoice Date: Apr 30, 2020

Invoice Num: 5162

Billing Through: Apr 29, 2020

Materials Testing Services

County Road Pump Station Upgrades - Westbrook, ME (1360-002-19:) - Managed by (101)

Professional Services:

Employee Title	Units	Rate	Amount
Staff Construction Tech.	15.25	$50.00	$762.50
Sr. Construction Technologist	2.75	$59.00	$162.25
Materials Engineer	1.25	$120.00	$150.00
		Total Services:	**$1,074.75**

Reimbursable Expenses:

Concrete Cylinders ASTM C39	8.00		$132.00
Mileage - Project Related	207.00		$128.15
Moisture Density ASTM D1557/AASHTO T180; modified Proctor	1.00		$135.00
Nuclear Densometer 1/2 Day	1.00		$30.00
Tolls & Parking	6.00		$11.00
Washed Gradation ASTM C136 & C117/Sieve Analysis	1.00		$75.00
		Total Expenses:	**$511.15**
		Project (1360-002-19:) Total Amount Due:	**$1,585.90**
		Amount Due This Invoice:	**$1,585.90**

This invoice is due on 5/30/2020

In place density, soil and concrete testing. Soil sample # 15916, concrete cylinder samples # 100959-100962, 100971-100974.

Account Summary

Billed To Date	Paid To Date	Balance Due
$2,982.98	$1,397.08	$1,585.90

BillQuick Standard Report Copyright © BQE Software, Inc.

INVOICE

Remit Payment to:
S. W. Cole Engineering, Inc.
37 Liberty Drive
Bangor, ME 04401-5784
207-848-5714
EIN: 01-0363633

KELLEY, KATHERINE
CITY OF WESTBROOK, MAINE
2 YORK STREET
WESTBROOK, ME 04092

Invoice: 95292
Invoice Date: 2/5/2020
P.O. Number:

Project: 18-0266.1 Westbrook ME - County Road Pump Station - Geotechnical Observations and Consulting Services

Project Manager: Walker, Evan M.

For Professional Services Provided Through 01/25/2020

	Hours	Amount
ENGINEER	2.00	$220.00
	PROJECT SUBTOTAL	$220.00
	INVOICE AMOUNT	**$220.00**

INVOICE

Remit Payment to:
S. W. Cole Engineering, Inc.
37 Liberty Drive
Bangor, ME 04401-5784
207-848-5714
EIN: 01-0363633

KELLEY, KATHERINE
CITY OF WESTBROOK, MAINE
2 YORK STREET
WESTBROOK, ME 04092

Invoice: 95636
Invoice Date: 3/5/2020
P.O. Number:

Project: 18-0266.1 Westbrook ME - County Road Pump Station - Geotechnical Observations and Consulting Services

Project Manager: Walker, Evan M.

For Professional Services Provided Through 02/22/2020

	Hours	Amount
GEOTECHNICAL ENGINEER	8.00	$880.00
SENIOR GEOTECHNICAL ENGINEER	.25	$41.25
	Qty	**Amount**
MILEAGE	31.00	$18.91
TOLLS	2.00	$2.10
	PROJECT SUBTOTAL	$942.26
	INVOICE AMOUNT	**$942.26**

INVOICE

Remit Payment to:
S. W. Cole Engineering, Inc.
37 Liberty Drive
Bangor, ME 04401-5784
207-848-5714
EIN: 01-0363633

KELLEY, KATHERINE
CITY OF WESTBROOK, MAINE
2 YORK STREET
WESTBROOK, ME 04092

Invoice: 95824
Invoice Date: 3/27/2020
P.O. Number:

Project: 18-0266.2 Westbrook ME - County Road Pump Station - Construction Materials Testing Services

Project Manager: Gimpel, Karl B.

For Professional Services Provided Through 03/21/2020

Professional Services

Date	Staff Name	Labor Description	Comments	Hours	Rate	Amount
03/06/20	Pennanen, Tyler	Field Density Testing		8.00	65.00	$520.00
03/09/20	Pennanen, Tyler	Field Density Testing		6.75	66.00	$445.50
03/10/20	Pennanen, Tyler	Field Density Testing		7.25	66.00	$478.50
03/10/20	Pennanen, Tyler	Report Preparation and Review		.50	66.00	$33.00
03/12/20	Pennanen, Tyler	Field Density Testing		9.25	66.00	$610.50
03/13/20	Pennanen, Tyler	Field Density Testing		2.75	66.00	$181.50
03/13/20	Pennanen, Tyler	Report Preparation and Review		1.50	66.00	$99.00
Total Professional Services				**36.00**		**$2,368.00**

Other Direct Charges

		Expense	Qty	Rate	Amount
3/6/2020	Pennanen, Tyler	Mileage	30.00	.600	$18.00
	Comment:				
3/6/2020	Pennanen, Tyler	Tolls	2.00	1.050	$2.10
	Comment:				
3/9/2020	Pennanen, Tyler	Mileage	30.00	.600	$18.00
	Comment:				
3/9/2020	Pennanen, Tyler	Tolls	2.00	1.050	$2.10

	Comment:				
3/10/2020	Pennanen, Tyler	Mileage	30.00	.600	$18.00
	Comment:				
3/10/2020	Pennanen, Tyler	Tolls	2.00	1.050	$2.10
	Comment:				
3/12/2020	Pennanen, Tyler	Mileage	30.00	.600	$18.00
	Comment:				
3/12/2020	Pennanen, Tyler	Tolls	2.00	1.050	$2.10
	Comment:				
3/13/2020	Pennanen, Tyler	Mileage	30.00	.600	$18.00
	Comment:				
3/13/2020	Pennanen, Tyler	Tolls	2.00	1.050	$2.10
	Comment:				
3/21/2020	S. W. Cole Engineering, Inc. Laboratory	Field Density Test - ASTM D6938	44.00	10.000	$440.00
	Comment:				
Total Other Direct Charges					$540.50
		PROJECT SUBTOTAL			$2,908.50
		INVOICE AMOUNT			**$2,908.50**

INVOICE

Remit Payment to:
S. W. Cole Engineering, Inc.
37 Liberty Drive
Bangor, ME 04401-5784
207-848-5714
EIN: 01-0363633

KELLEY, KATHERINE
CITY OF WESTBROOK, MAINE
2 YORK STREET
WESTBROOK, ME 04092

Invoice: 96879
Invoice Date: 6/9/2020
P.O. Number:

Project: 18-0266.1 Westbrook ME - County Road Pump Station - Geotechnical Observations and Consulting Services

Project Manager: Walker, Evan M

For Professional Services Provided Through 05/16/2020

	Hours	Amount
GEOTECHNICAL ENGINEER	2.75	$302.50
SENIOR GEOTECHNICAL ENGINEER	1.00	$165.00
	PROJECT SUBTOTAL	$467.50
	INVOICE AMOUNT	**$467.50**

INVOICE

Remit Payment to:
S. W. Cole Engineering, Inc.
37 Liberty Drive
Bangor, ME 04401-5784
207-848-5714
EIN: 01-0363633

KELLEY, KATHERINE
CITY OF WESTBROOK, MAINE
2 YORK STREET
WESTBROOK, ME 04092

Invoice: 97230
Invoice Date: 6/29/2020
P.O. Number:

Project: 18-0266.2 Westbrook ME - County Road Pump Station - Construction Materials Testing Services

Project Manager: Gimpel, Karl B

For Professional Services Provided Through 06/13/2020

Professional Services

Date	Staff Name	Labor Description	Comments	Hours	Rate	Amount
02/28/20	LaBonte, Ryan K	Field Density Testing		5.50	66.00	$363.00
02/28/20	LaBonte, Ryan K	Travel		2.00	66.00	$132.00
Total Professional Services				**7.50**		**$495.00**

Other Direct Charges

		Expense	Qty	Rate	Amount
2/28/2020	LaBonte, Ryan K	Mileage	36.00	.600	$21.60
	Comment:				
2/28/2020	LaBonte, Ryan K	Tolls	1.00	1.050	$2.63
	Comment:				
3/21/2020	S. W. Cole Engineering, Inc. Laboratory	Field Density Test - ASTM D6938	3.00	10.000	$30.00
	Comment:				
Total Other Direct Charges					$54.23
		PROJECT SUBTOTAL			$549.23
		INVOICE AMOUNT			**$549.23**

Tri-State Tool & Hoist, Inc.

707 S. Ellsworth Ave.
Salem, OH 44460
Phone: (330) 332-3500
Fax: (330) 332-3510

QUOTATION NO.

PAGE 1 OF 1

Date: 3/6/2020

Company Westbrook WWTP

Attn Dan
Phone 207-252-3824 Cell Ext:
Fax
dvaughan@westbrook.me.us

WE ARE PLEASED TO SUBMIT THE FOLLOWING QUOTATION FOR YOUR CONSIDERATION.

Subject Thern Davit Crane

Quantity	Description	Your Net Cost Each	Total Line Item Cost
1	Thern Commander 2000, 5PT20-E2- 2000lbs. Capacity crane with 4WP2-K electric winch. Powder Coat Finish	$ 3,705.00	$ 3,705.00
1	Thern 5BR20- Wheel Base, Frame Powder Coat Finish	$ 1,385.00	$ 1,385.00
1	Thern WS25-36NS 1/4" x 36ft Stainless Steel wire rope assy.	$ 245.00	$ 245.00
1	Freight to Jobsite	$ 200.00	$ 200.00
		TOTAL	**$ 5,535.00**

	Delivery 1 - 2 Weeks	F. O. B.: Weight	FOB	TERMS:	Net 30 Days to Approved Accounts
				Total Approximate Ship Weight (lbs)	0

Price is for material only, unless otherwise noted above.
Does not include taxes or any items not mentioned in quote.
Quote valid for 30 days.

Quoted By,

BY *Brent Tice*

Date:

Note: Sign and return one (1) copy of this quotation to initiate order process.

Quotation is accepted subject to Standard Terms and Conditions.
I accept your Terms and Conditions. Please enter my Order.

Company:
Address:

CC
Cell

Signature:

MAIL REMITTANCE TO:

Hayes Pump, Inc- (01-WC)
PO Box 0351
Brattleboro VT 05302-0351
US

INVOICE

ENTERING OFFICE:
Hayes Pump, Inc- (01-WC)
66 Old Powder Mill Road
Concord MA 01742
US

INVOICE NUMBER
00126830
INVOICE DATE
10/29/2019
PAGE
1 / 1

Customer	Date Ordered	Date Shipped	Written By	Order Type	Ship From Loc	Selling Loc
W4470	10/25/2019	10/29/2019	DDALOIA	STAND	01	01

Ship Method	Terms Of Payment	FOB
BEST WAY	NET 30 DAYS	Shipping point

Customer PO	Mark Number
10/25/19 DVAUGHAN	

Tracking numbers: 1Z0113840361409884

LINE NO.	QUANTITY TOTAL ORDER	BACK ORDER	THIS SHIPMNT	ITEM DESCRIPTION	UOM	UNIT PRICE	EXTENDED AMOUNT
0010	1.00	0.00	1.00	**2613EV 13990** GR WARNING PLATE AL	EA	6.3765	6.38
0020	2.00	0.00	2.00	**BM#04-03 17000** GR DRIVE SCREW SST	EA	0.3815	0.76
0030	1.00	0.00	1.00	**38816-302** GR WARNING DECAL	EA	0.8720	0.87
0040	2.00	0.00	2.00	**11402G 19370** GR GASKET	EA	16.2410	32.48
0050	1.00	0.00	1.00	**38816-097 13990** GR WARNING PLATE AL	EA	3.7060	3.71
0060	2.00	0.00	2.00	**25152-152** GR O-RING	EA	1.0355	2.07
0070	2.00	0.00	2.00	**25225-025** GR OIL SEAL	EA	20.9280	41.86

Phone: 978 369-8800
SO #: 00091551
PL #: 00089500

Subject to Hayes Pump, Inc.'s Terms of Sale, which can be found at http://hayespump.com/Terms.

A correct tax-exempt certificate must be on file for tax to be adjusted from the invoice. Please fax to 978-369-8461 or email to tmackenzie@hayespump.com.

For AR questions:
For New England customers, contact Betsy at ecerra@hayespump.com or 978-318-4209.
For Mid Atlantic customers, contact Gisela at ghansler@hayespump.com or 973-852-6625

AMOUNT	88.13
FRGHT/INS/HNDL	13.92
SALES TAX	0.00
AMOUNT DUE	**102.05**

DATE: 11/13/2019
ACCOUNT: 80203250
AUTH. BY: K. Kelley
AMOUNT: $102.05

BILL TO
CITY OF WESTBROOK
WASTEWATER DEPT
2 YORK STREET
WESTBROOK ME 04092
US

SHIP TO
CITY OF WESTBROOK
ATTN: WASTEWATER DEPT
attn: DANIEL VAUGHAN
371 SACO ST
WESTBROOK ME 04092
US

CITY OF WESTBROOK, MAINE

IN CITY COUNCIL

Date: August 3, 2020

Order: 2020-95

AUTHORIZING AWARD OF BID FOR PUBLIC SAFETY BUILDING ASSESSMENT

That the Westbrook City Council hereby authorizes an award of bid to Port City Architecture of Portland, Maine in the total amount of $19,488 for space planning and security system consultation at the Public Safety Building.

Funds available in budget line 40002000-58900-C1903

First Reading: August 3, 2020 Second and Final Reading:

Attest:

City Clerk Mayor

CITY OF WESTBROOK, MAINE

2 York Street, Westbrook, ME 04092

REQUEST FOR COUNCIL ACTION

*Requests are due to the City Clerk two Fridays prior to a Council meeting. If expenditure/acceptance of funds is involved, Finance Department approval is required **prior** to submission.*

PROPOSED TITLE: Authorizing Expenditure for Public Safety Building Assessment

REQUESTED BY: Eric Dudley, Director of Engineering and Public Services

DATE: March 6, 2020

SUMMARY:

The Department of Engineering and Public Services requests authorization in the amount of $19,488 to Port City Architecture of Portland, Maine for space planning and security system consultation at the Public Safety Building. Since the building was opened in 2004, the fire department and police department have seen an expansion in personnel which has pushed the limits on the current configuration of employee spaces. There has also been some concern on the level of security in certain sections of the building. The purpose of this study is to find a way to more efficiently use the existing spaces for all personnel while also enhancing security. Public Services sought competitive proposals for architectural services and received 3 responses. A review committee made up by police, fire, emergency communications and public services reviewed the proposals and unanimously selected Port City to perform the work. Their extensive background in these exact studies coupled with their proposed approach and lowest cost had them at the top of each reviewer's list. This project was budgeted in the City's 2019/20 CIP.

BUDGET LINES AFFECTED (IF APPLICABLE):

40002000-58900-C1903

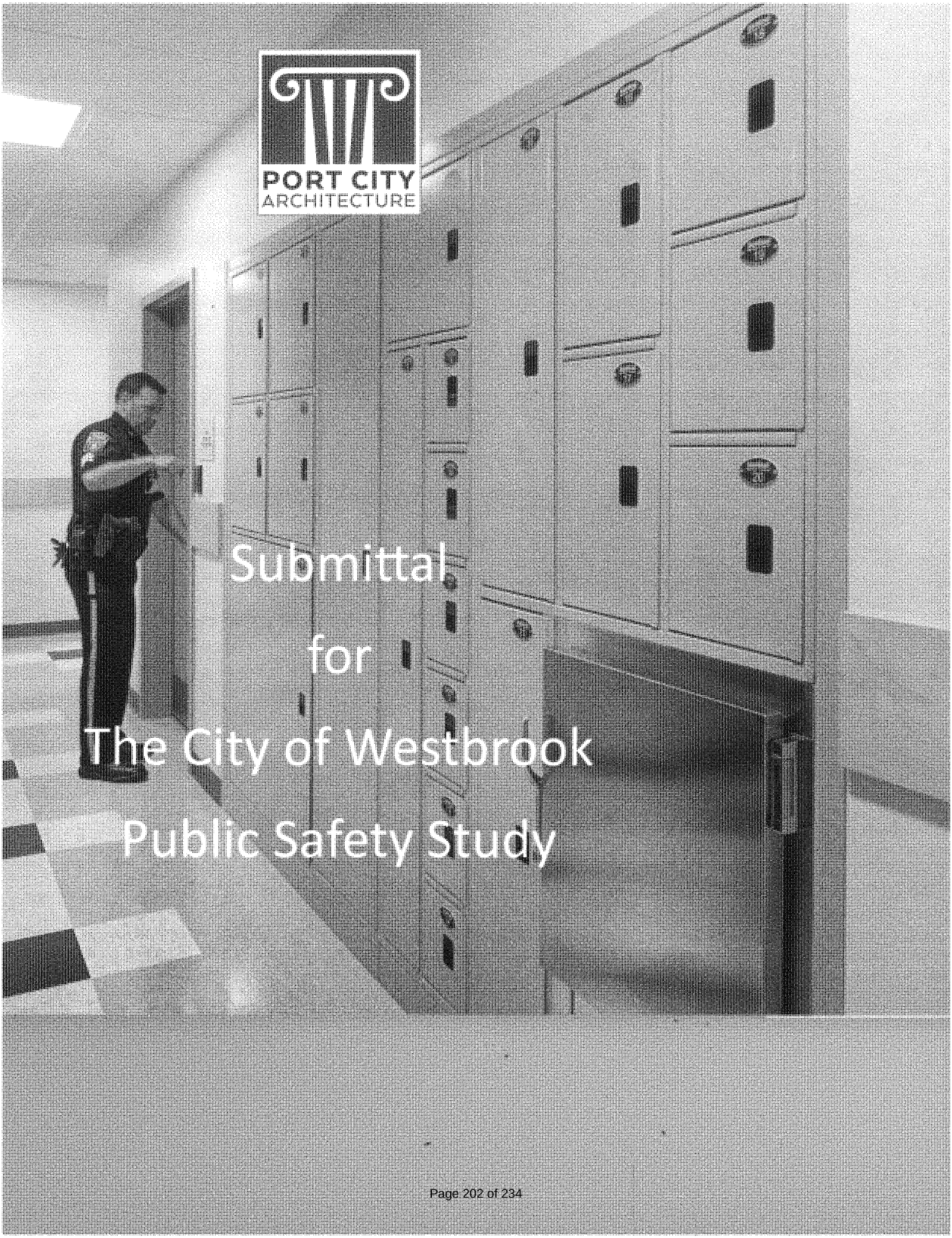

PORT CITY ARCHITECTURE

Submittal for The City of Westbrook Public Safety Study

Fees: Lump Sum Fee

Subtotal:	$18,560
Reimbursables:	$920
Total:	$19,488

"Our numerous projects have successfully met the needs of their communities and have all been constructed on the budgets we projected in the study."

PORT CITY ARCHITECTURE

Proposed Fees: Budget with Anticipated Hours

Anticipated Staff:

AH	Andrew Hyland	Port City
JP	Jason Pica	Port City
BF	Bill Faucher	Allied Engineering Structural
IM	Ian MacDonald	Allied Engineering Mechanical
CF	Cathy Faucher	Allied Engineering Electrical
MR	Mason Rowell	Landry French preconstruction director/estimator
PCA	Staff support	Port City++

1. Provide a base plan of the existing facility based on existing facility drawings and site investigations and measurements of the facility. (We are assuming that only paper drawings exist and no CADD files exist.) Provide a basic assessment of current IBC and Life Safety code compliance and existing Mechanical, electrical, and plumbing systems. workplace safety, potential hazards, and current functionality pertaining to modern fire, ems, dispatch, and law enforcement practice. (Basic knowledge of these systems is important to provide accurate estimating for proposed reconfigurations.) Hours include site visits and documentation of the findings

Staff Members:	AH	JP	BF	IM	CF	MR	PCA
Anticipated hours:	8	16	2	2	2	2	12

Proposed fee: $4,960 If CADD files are available we can reduce this fee 30%

ing Structural
ing Mechanical
ing Electrical
preconstruction director/estimator

lity based on existing facility drawings and site investigations and measurements of
aper drawings exist and no CADD files exist.) Provide a basic assessment of current
existing Mechanical, electrical, and plumbing systems. workplace safety, potential
ing to modern fire, ems, dispatch, and law enforcement practice. (Basic knowledge
ccurate estimating for proposed reconfigurations.) Hours include site visits and doc-

	CF	MR	PCA
	2	2	12

ailable we can reduce this fee 30%

2. Interview the appropriate personnel and provide a space programming needs assessment document for the Fire, EMS, Dispatch, and Police Departments. We will assess staffing needs based on current conditions and on future estimated projections from staff and industry trends. We will identify other program space deficiencies and provide recommendations based on industry projections. We will provide an assessment of total future gross space needs for 20-30 years in the future and identify the most pressing demands for space that will fit within a reconfigured floor plan.

Staff Members:	AH	JP	PCA
Anticipated hours:	16	12	4

Proposed fee: $3,880

3. Design the best schematic floor plan concept for the Public Safety facility to maximize the utilization of the existing building. We will look at reconfiguration options to improve all department's functionality, efficiency, and security for current and future needs. Include recommendations for the building's structural, mechanical, and electrical systems required to provide a code compliant facility.

Staff Members:	AH	JP	BF	IM	CF	PCA
Anticipated hours:	12	18	2	2	2	12

Proposed fee: $5,520

4. Provide a comprehensive cost estimate in an ala-cart format for the chosen reconfiguration. Provide a breakdown of the scope into logical smaller groups of work with associated cost estimates. Provide each estimate in a total project cost format including fees and other owner's soft costs.

Staff Members:	AH	MR
Anticipated hours:	3	12

Proposed fee: $1,785

Proposed Fees: Budget with Anticipated Hours

5. Attend meetings with the stakeholders for input and direction throughout the study period. We will attend up to three meetings with the departments for input and direction throughout the study.

Staff Members: AH

Anticipated hours: 9

Proposed fee: $1,215

6. Provide a written narrative report outlining the process and including recommendations, evaluations, space programming documents, code compliance review, and other pertinent documents.

Staff Members: JP PCA

Anticipated hours: 6 6

Proposed fee: $1,200

Subtotal:	**$18,560**
Reimbursables:	**$920**
Total:	**$19,488**

PORT CITY ARCHITECTURE

CITY OF WESTBROOK, MAINE

IN CITY COUNCIL

Date: August 3, 2020

Order: 2020-96

AUTHORIZING AWARD OF BID FOR UNMARKED POLICE VEHICLE

That the Westbrook City Council hereby authorizes an award of bid to Yankee Ford of South Portland, ME in the total amount of $21,500 for a 2019 Ford Taurus Limited AWD unmarked Police vehicle.

Funds available in budget line 22002110-57320-02213

First Reading: August 3, 2020 Second and Final Reading:

Attest:

City Clerk Mayor

CITY OF WESTBROOK, MAINE

2 York Street, Westbrook, ME 04092

REQUEST FOR COUNCIL ACTION

*Requests are due to the City Clerk two Fridays prior to a Council meeting. If expenditure/acceptance of funds is involved, Finance Department approval is required **prior** to submission.*

PROPOSED TITLE: Award of RFP for an unmarked police vehicle to Yankee Ford of So. Portland, Maine for the purchase price of $21,500.00

REQUESTED BY: Captain Sean Lally

DATE: 07/17/2020

SUMMARY:

In June 2020, the Police Department send out a request for proposal to local car dealerships in search of a used, newer model 4 door Ford Taurus Limited sedan for our unmarked vehicle fleet. The criteria set was 2017-2019 model year with less than 30k miles. We received the following offers that satisfied the criteria:

Yankee Ford Ford So. Portland 2019 Ford Taurus Limited AWD

27,204 miles = $21,500.00 (no doc fees)

Portsmouth Ford Portsmouth, NH 2019 Ford Taurus SEL AWD

13,145 miles =$22,595.00

Portsmouth Ford Portsmouth, NH 2019 Ford Taurus Limited AWD

15,250 miles =$22,995.00

Cars that fit these criteria are in high demand. Used cars with low mileage turn around quickly. The Police Administration respectfully asks for Council approval to purchase the 2019 Ford Taurus for the purchase price of $21,500.00. The funds for this vehicle are available in the cruiser fees revenue line.

BUDGET LINES AFFECTED (IF APPLICABLE):

~~22002110 44000 02213~~ 22002110 -57320-02213

YANKEE Ford

96214

165 Waterman Drive
SOUTH PORTLAND, MAINE 04106
Tel. 799-5591

SOLD TO WESTBROOK POLICE DEPARTMENT
371 SACO ST
ADDRESS WESTBROOK, ME 04092
207-854-0644 207-854-0644

DATE 07/16/2020

YEAR	NEW OR USED	MAKE	COLOR	MODEL	SWAP-IN	SOURCE	
2019	USED	FORD	RUBY RED TC	TAURUS LIMITE			CUST#: 127516

VEHICLE IDENTIFICATION NUMBER	1FAHP2J87KG118884	SALESMAN NUMBER	STOCK NUMBER
		SCOTT A BONNEY	315 14059

KEY NUMBERS		BODY STYLE 4DR AWD	CYL. 6	CAR DEAL 0003024

MILEAGE: 27304

DESCRIPTION	ACCT. NO.	K	SALE	K	COST	K
@ 1			21500.00			
PRICE				–		
SALES TAX	2150		NA	–		
LICENSE, TITLE & ADMIN.			NA	–		
SERVICE CONTRACTS				–		
TOTAL CASH PRICE			21500.00			
FINANCING			NA			
INSURANCE			NA			
TOTAL TIME PRICE			21500.00			
DEPOSIT	1110		NA	+		
DUE ON DELIVERY	1110		21500.00	–		
				–		
TRADE-IN ALLOWANCE PAYMENTS MONTHS DOLLARS 1 @ PER MONTH						
TOTAL			21500.00			
PAY OFF BAL. OWING FIN. CO.	2102		NA	–		
	2102			–		
FINANCE CONTRACT	1020		NA	+		
INSURANCE PREMIUMS	2106			–		
COMM. EXP.				+		
				+		
SAL #	2411			–		
SAL #	2411			–		
VALUE OF TRADE-IN(S)				+		

NA
NA
NA

CITY OF WESTBROOK, MAINE

IN CITY COUNCIL

Date: August 3, 2020

Order: 2020-97

AUTHORIZING APPROPRIATION OF RECREATION AND CONSERVATION COMMISSION OPEN SPACE FUNDS FOR THE CORNELIA WARREN 4-SEASON RINK PROJECT

That the Westbrook City Council hereby authorizes a Recreation and Conservation Commission expenditure in an amount not to exceed $15,088 to Court Builders of America of Andover, MA, for the reconstruction of the Cornelia Warren 4-Season Rink located at 58 Lincoln Street, as outlined in the attached exhibit.

Funds in the amount of $4,400 available in budget line 28001820-59000-02807.
Funds in the amount of $3,845 available in budget line 28001820-59000-02813.
Funds in the amount of $4,202 available in budget line 280001820-59000-02828.
Funds in the amount of $2,011 available in budget line 28001820-59000-02833.
Funds in the amount of $630 available in budget line 28001820-59000-02834.

First Reading: August 3, 2020 Second and Final Reading:

Attest:

City Clerk Mayor

CITY OF WESTBROOK, MAINE

2 York Street, Westbrook, ME 04092

REQUEST FOR COUNCIL ACTION

*Requests are due to the City Clerk two Fridays prior to a Council meeting. If expenditure/acceptance of funds is involved, Finance Department approval is required **prior** to submission.*

PROPOSED TITLE: **Cornelia Warren 4-Season Rink**

REQUESTED BY: Rebecca Spitella

DATE: 07/23/2020

SUMMARY:

See Attached Memo

Budget Lines Affected:
28001820-59000-02807 - HW Land Co/Victoria Drive - $4,400.00
28001820-59000-02813 - Essex Street - $3,845.00
28001820-59000-02828 - East Bridge Street - $4,202.00
28001820-59000-02833 - 212 Brown Street - $2,011.00
28001820-59000-02834 - 50 Pleasant Street - $630.00

BUDGET LINES AFFECTED (IF APPLICABLE):

See above.

OK SMK

Westbrook, Maine
PLANNING & CODE ENFORCEMENT

Planning & Code Enforcement
2 York Street
Westbrook, Maine 04092
Phone: 207-854-0638
Fax: 866-559-0642

MEMO

DATE: July 23, 2020

TO: Mayor, City Council
FROM: Rebecca Spitella, Asst. Planner
Cc: City Administrator, City Clerk

RE: Recreation & Conservation Commission – Cornelia Warren 4-Season Rink Project – Funding Request

Attached: Memo and Budget from Jerre Bryant, City Administrator, & Greg Post, Director of Community Services

---

At their July 16, 2020 meeting, the Recreation and Conservation Commission heard a request for funding proposal prepared by Greg Post regarding the Cornelia Warren 4-Season Rink project located at 58 Lincoln Street.

Background:

The City of Westbrook is currently in the process of revitalizing the Cornelia Warren Outdoor Ice Rink to a new 4-Season Rink at 58 Lincoln Street. Groundwork begin in April 2020 and the project is anticipated to continue throughout the summer to be completed in the fall of 2020.

The total cost of the project is $263,600 of which $248,512 has been previously raised through grants and donations. On July 16, 2020, the Recreation and Conservation Commission voted in favor to allocate $15,088 from the open space fund for the City of Westbrook to cover the remaining cost of this important project.

Request:

The Recreation and Conservation Commission is requesting the City Council approve the disbursement of open space funds in an amount of $15,088 to be allocated for two contractual agreements with Court Builders of America, Andover, Massachusetts, for the reconstruction of the Cornelia Warren 4-Season Rink located at 58 Lincoln Street.

Budget Lines Affected:

28001820-59000-02807 – HW Land Co/Victoria Drive - $4,400.00
28001820-59000-02813 – Essex Street - $3,845.00
28001820-59000-02828 – East Bridge Street - $4,202.00
28001820-59000-02833 – 212 Brown Street - $2,011.00
28001820-59000-02834 – 50 Pleasant Street - $630.00

Westbrook, Maine
MAYOR'S OFFICE

Mayor Michael T. Foley
2 York Street
Westbrook, Maine 04092
Phone: 207-591-8110
Fax: 877-688-9553

To: Sarah Andre, Chair - Westbrook Recreation & Conservation Commission
Rebecca Spitella, Assistant Planner

From: Jerre R. Bryant, City Administrator

Re: Cornelia Warren 4-Season Rink Project

As we near completion of our fund raising efforts for the $263,600 revitalization of the Cornelia Warren 4-Season Rink at 58 Lincoln Street, we are asking that the Westbrook Recreation & Conservation Commission consider a request for $15,088 to complete funding for this exciting project. This project is consistent with the mission of the Commission, will convert a very tired skating rink into a state of the art, four season recreational feature, located at the edge of Downtown Westbrook yet very accessible to many residential neighborhoods.

This project was initiated by John Morgan and Greg Post and is fully supported by the City of Westbrook, with the City Council giving first reading to the contractual agreements to complete construction of this facility this summer. Both John and Greg will be at the next meeting of the commission to provide a more detailed presentation on this project and respond to any questions from the Commission.

Westbrook, Maine
WESTBROOK COMMUNITY CENTER

Westbrook Community Center

Greg Post
Director of Community Services
426 Bridge Street
Westbrook, Maine 04092
Phone: 207-854-0676
Email: gpost@westbrook.me.us

Cornelia Warren Four Season Rink Revitalization Overview

June 12, 2020

The City of Westbrook is currently in the process of revitalizing the Cornelia Warren Four Season Rink at 58 Lincoln Street. Groundwork began in April 2020, and additional efforts will continue over the next couple of months.

Updates to the facility, which was last renovated in August of 1994, will include a new concrete sub-surface, new multi-functional Sport Court playing surface featuring PowerGame+™ tiles, a new dasher board system, and new safety netting.

The Cornelia Warren Four Season Rink project would not be possible without the tireless work of John Morgan, representing Soccer Maine, Rosevelt Soccer, and Westbrook Soccer Club; support from the City's Public Services, Economic Development, and Community Services Departments; and the donations and grants provided by the Cornelia Warren Community Association, Soccer Maine, US Soccer Foundation, and Community Development Block Grant.

Using a true grassroots approach from the on-set, $250,000 for this project was raised through donations and grants, using no taxpayer dollars.

Once the facility revival is complete – anticipating mid- to late-summer 2020, the City hopes to activate several new program options for both youth and adults, including 3-on-3 basketball, dodgeball, flag football, futsal (small-sided soccer), lacrosse, street hockey, and ultimate frisbee. During the cold winter months, once the rink is flooded and frozen, it will host ice hockey and family skates, and potentially broomball, curling clinics, and figure skating lessons. The facility already has some existing lighting, so this will surely enhance evening programs and activities, and provide opportunities for organized leagues and tournaments.

Parking, signage, access to the boat launch, and landscaping – including the removal of evasive species along the nearby Presumpscot River, will also be addressed during this project, using dedicated funds received thru a separate CDBG grant.

The facility is destined to become a popular recreational hub for the City, with both dry-land and aquatics programming opportunities.

Should there be any questions or concerns, please reach out to Greg Post by phone at 207.899.7701 or e-mail at gpost@westbrook.me.us. Thanks!

On Monday, June 15th the Westbrook City Council gave first reading for the authorization of two contractual agreements with Court Builders of America, Andover, Massachusetts, for the reconstruction of the Cornelia Warren Four Season Rink located at 58 Lincoln Street. These two contracts are the culmination of years of work by community members, local sports groups, regional and national sports organizations, the Cornelia Warren Community Association and the City of Westbrook to replace and modernize the rink and expand its scope of use to include multiple sports and year round usage. This $263,600 project is nearly fully funded through grants and donations, with the city providing some in-kind services with Public Services demolishing the former structure and doing some site work over the winter. The final $15,088 in funding for this project is currently pending with the Westbrook Recreation & Conservation Commission. Total finding for the project is from the following sources:

$120,000	Community Development Block Grant
50,000	Soccer Maine
50,000	Cornelia Warren Community Association
28,512	US Soccer
15,088	City of Westbrook – Rec & Cons
$263,600	

This project is an outstanding re-use and upgrade of an existing facility, with the organization that funded its original construction supporting and helping fund this renovation. This project will be on the City Council's July 6, 2020 agenda for final approval with a July 15th anticipated commencement of construction.

Jerre Bryant

From: Jerre Bryant
Sent: Tuesday, June 16, 2020 12:31 PM
To: Elliot Storey
Cc: Michael Foley; Gary Rairdon; Anna Turcotte; David Morse; Victor Chau; Claude Rwaganje; 'Michael Shaughnessy'
Subject: Additional Clarity on the Cornelia Warren 4-Season Rink Project

I just wanted to follow up on your questions last night regarding the contract prices for the Cornelia Warren 4 Season Rink project.

Three were two contracts with Court Builders for this project. The first was for the Dasher Board System at a cost of $120,000. The second was also with Court Builders and was split into two parts, the playing surface at a cost of $93,600 and the concrete base at a cost of $50,000 for a total contract price of $143,600. These two contracts combine for a total cost of $263,600. The City, through the Public Services Department, did provide the in-kind services of demolishing the existing structure and the earth work needed for the installation of the concrete base. That work was accomplished over the winter.

Contract #1	Court Builders	$120,000	Dasher Board System
Contract #2	Court Builders	$143,600	Playing Surface $93,600
			Concrete Base $50,000
	Total	$263,600	

Funding for this project was derived from the following sources

$120,000	Community Development Block Grant
$ 50,000	Cornelia Warren Community Association
$ 50,000	Soccer Maine
$ 28,512	U.S. Soccer (Discount credit)
$ 15,088	Westbrook Recreation & Conservation Commission (pending)
$263,600	

Advance deposits were paid to the contractor by CDBG $70,000 for Dasher Board System and Soccer Maine $50,000 for the playing surface

The $28,512 credit from U.S. Soccer was applied directly to the contractor.

The contracts were a bit confusing from a cost, deposit and payment due standpoint so hopefully the above itemization of costs and funding sources provides some additional clarity.

This is a great resident initiated project, supported by multiple organizations and funded by non-property tax sources.

Jerre.

CITY OF WESTBROOK, MAINE

IN CITY COUNCIL

Date: August 3, 2020

Order: 2020-98

AUTHORIZING PURCHASE OF REPLACEMENT VOICE/RADIO RECORDER SYSTEM

That the Westbrook City Council hereby authorizes the purchase and installation of a NexLog 740 Recorder System for Public Safety Dispatch from Radio Communication Management, Inc. of Portland, Maine at the total cost of $41,894.40.

Funds available in budget line: 10001530-57340

First Reading: August 3, 2020 Second and Final Reading:

Attest:

City Clerk Mayor

CITY OF WESTBROOK, MAINE

2 York Street, Westbrook, ME 04092

REQUEST FOR COUNCIL ACTION

*Requests are due to the City Clerk two Fridays prior to a Council meeting. If expenditure/acceptance of funds is involved, Finance Department approval is required **prior** to submission.*

PROPOSED TITLE: Request to upgrade existing voice/radio recorder

REQUESTED BY: Gregory Hamilton

DATE: 07/28/2020

SUMMARY:

The Department respectfully requests to replace our existing recorder. Our current recorder is six years old, has a Windows 7 operating system and has reached end of life. This recorder captures all 911 calls, emergency radio traffic and non-emergency law enforcement telephone calls at Public Safety.

As this is an integral part of our radio system that will be tied directly into our radio consoles in dispatch, the department requests sole source approval for this purchase. This recorder acts not only as tool for administrators and supervisors tasked with assuring that we are providing the best service we can provide to the public we serve, it also serves as a quick recall for that dispatcher trying to discern an excited utterance on a 911 call or emergency radio traffic. The Eventide Nexlog 740 Recorder replaces the current make of recorder sold by our radio vendor. Council approved RCM as our sole source vendor for our radio project last year at the onset of the digital radio project.

If approved, this recorder upgrade will allow the Department to accomplish an additional goal. The Department will be able to record the audio of our vocal alarm transmissions as well as move the vocal alarm functionality to the radio consoles at all dispatch positions. We will now be able to do away with the two old analog vocal alarm panels in dispatch and we will have full functional ability at all four positions.

BUDGET LINES AFFECTED (IF APPLICABLE):

10001530 57340

SMKnight

RADIO COMMUNICATIONS MGMT, INC
158 RAND ROAD
PORTLAND, ME 04102

Voice: 207-797-7503
Fax: 207-878-3521

QUOTATION

Quote Number: 7535
Quote Date: Jul 17, 2020
Page: 1

Quoted To:
WESTBROOK POLICE DEPT 570 MAIN STREET WESTBROOK, ME 04092

Customer ID	Good Thru	Payment Terms	Sales Rep
WESTBROOK POLICE DEP	8/16/20	Net 30 Days	MAC McKNIGHT

Quantity	Item	Description	Unit Price	Amount
		*** Budgetary Pricing *** Upgrade existing voice recorder to Eventide NexLog 740 Recorder Includes: (40) VoIP Channels (24) Analog Channels Upgrade of Zetron console system for the capabilities of VoIP recording Upgrade of Zetron console system for Station Alerting control and access. Includes year (1) 24/7/365 On-site warranty and phone support . After year 1 ongoing annual maintenance cost will be $3,217.00/year.		
1.00	TITLE	NexLog 740 Recorder System Includes the following:	39,014.40	39,014.40
1.00	MISC-ITEM	NexLog 740 DX-Series base system: 3U rack-mountable, Core i5 CPU, 16GB DDR4 RAM, 2 x1TB fixed-Mount HDDs (RAID 1), 1 Blu-ray Multi-Drive,		

Subtotal	Continued
Sales Tax	Continued
TOTAL	**Continued**

RADIO COMMUNICATIONS MGMT, INC
158 RAND ROAD
PORTLAND, ME 04102

Voice: 207-797-7503
Fax: 207-878-3521

QUOTATION

Quote Number: 7535
Quote Date: Jul 17, 2020
Page: 2

Quoted To:
WESTBROOK POLICE DEPT 570 MAIN STREET WESTBROOK, ME 04092

Customer ID	Good Thru	Payment Terms	Sales Rep
WESTBROOK POLICE DEP	8/16/20	Net 30 Days	MAC McKNIGHT

Quantity	Item	Description	Unit Price	Amount
		2 Network Ports (100/1000), Embedded Linux, NexLog DX-Series software, web-based configuration manager, audio controls & amplified speaker on front panel, dual hot- swap 120-240VAC 50/60Hz power supplies and first year hardware warranty. Requires ongoing Eventide DX Software Update Subscription (DXSUS) for access to critical DX-Series Software & Security Updates.		
1.00	MISC-ITEM	#105301 7" Color LCD Touch Screen for NexLog 740		
1.00	MISC-ITEM	#324430 Rack Mt Slides - 4 Post, 3U (for NexLog 740)		
1.00	MISC-ITEM	#271083 8 pack MediaWorks PLUS web concurrent license [About MediaWorks PLUS: Advanced browser-based HTML5 interface for Search, Replay, Incident Reconstruction, Incident Export, Live Monitoring, Instant Recall and more]		
1.00	MISC-ITEM	#DX799 Upgrade 740 DX-Series (at time of order) 2x1TB HotSwap RAID1=1TB storage		
1.00	MISC-ITEM	#271052 Internal IP Recorder with First 8 G.711 Channels		
4.00	MISC-ITEM	#271035 Additional Internal IP G.711 8-Channel license pack		

Subtotal	Continued
Sales Tax	Continued
TOTAL	**Continued**

RADIO COMMUNICATIONS MGMT, INC
158 RAND ROAD
PORTLAND, ME 04102

Voice: 207-797-7503
Fax: 207-878-3521

QUOTATION

Quote Number: 7535
Quote Date: Jul 17, 2020
Page: 3

Quoted To:
WESTBROOK POLICE DEPT 570 MAIN STREET WESTBROOK, ME 04092

Customer ID	Good Thru	Payment Terms	Sales Rep
WESTBROOK POLICE DEP	8/16/20	Net 30 Days	MAC McKNIGHT

Quantity	Item	Description	Unit Price	Amount
1.00	MISC-ITEM	#DXANA24 24-Channel Analog PCIe (PCI Express) Card, 24 Ch. Licenses (For use in DX-Series recorders only)		
1.00	MISC-ITEM	#209029 911 NENA ANI/ALI CAD Spill Integration		
1.00	MISC-ITEM	#115021 NexLog Reporting Engine (a.k.a. Enhanced Reporting)		
1.00	MISC-ITEM	#DX591 Single-port PCIe (PCI Express) Network Card (for NexLog 740 DX-Series recorder or NexLog 840 DX-Series recorder)		
1.00	MISC-ITEM	#271111 Eventide MP3 option for MediaWorks PLUS		
1.00	MISC-ITEM	#271077 NexLog Quality Assurance (a.k.a. Quality Factor): FIRST 20 Agents (Requires MediaWorks PLUS)		
1.00	TECHNICIAN-50	On-site installation of recorder and user training	1,600.00	1,600.00
1.00	TITLE	Upgrade Zetron Console for IP recording		
1.00	901-9715	MAX CENTRAL (Gateway Portal)		
3.00	930-0237	IP VOICE LOGGER CHANNEL BLOCK LICENSE (10 CH)		
1.00	TECHNICIAN-27	RCM Technician Labor- Upgrade console software version to allow for recorder IP integration	800.00	800.00

Subtotal	Continued
Sales Tax	Continued
TOTAL	**Continued**

RADIO COMMUNICATIONS MGMT, INC
158 RAND ROAD
PORTLAND, ME 04102

Voice: 207-797-7503
Fax: 207-878-3521

QUOTATION

Quote Number: 7535
Quote Date: Jul 17, 2020
Page: 4

Quoted To:
WESTBROOK POLICE DEPT 570 MAIN STREET WESTBROOK, ME 04092

Customer ID	Good Thru	Payment Terms	Sales Rep
WESTBROOK POLICE DEP	8/16/20	Net 30 Days	MAC McKNIGHT

Quantity	Item	Description	Unit Price	Amount
1.00	TITLE	Install Station Alerting into console and add as recorded channel		
1.00	901-9677	MAX RADIO GATEWAY CON HARDWARE (RJ21)		
1.00	930-0376	BLOCK OF 2 RADIO CHANNEL LICENSES		
6.00	TECHNICIAN-27	RCM Tech Labor - Install and configure Station Alerting.	80.00	480.00
			Subtotal	41,894.40
			Sales Tax	
			TOTAL	**41,894.40**

CITY OF WESTBROOK, MAINE

IN CITY COUNCIL

Date: August 3, 2020

Order: 2020-99

AUTHORIZING ACCEPTANCE OF ASSET FORFEITURE FUNDS

That the Westbrook City Council hereby authorizes the Police Department to accept a total of $3,359.54 in forfeiture funds as determined by Federal Bureau of Investigation due to the Westbrook Police Department's substantial contributions to the investigations of certain criminal cases, as outlined in the attached memorandum.

Funds to be deposited into revenue line 21002110-49000-02115

First Reading: August 3, 2020 Second and Final Reading:

Attest:

City Clerk Mayor

CITY OF WESTBROOK, MAINE

2 York Street, Westbrook, ME 04092

REQUEST FOR COUNCIL ACTION

*Requests are due to the City Clerk two Fridays prior to a Council meeting. If expenditure/acceptance of funds is involved, Finance Department approval is required **prior** to submission.*

PROPOSED TITLE: Acceptance of Asset Forfeiture Funds

REQUESTED BY: Captain Steven Goldberg - Westbrook Police Department

DATE: 07/22/2020

SUMMARY:

The Westbrook Police Department is requesting acceptance of Asset Forfeiture Funds in the amount of $3,359.54. These funds are from a case that the Westbrook Police Department assisted the FBI with.

BUDGET LINES AFFECTED (IF APPLICABLE):

21002110 49000 02115

OK
TAA
7/24/20

Mary Morrissey

From: Tressina Germani
Sent: Thursday, June 18, 2020 9:55 AM
To: Mary Morrissey
Subject: ACH deposit - Can you let me know what this is for? No invoice associated with it.

-

ACH
INFORMATION

-

RECEIVER NAME: ME0030800 City of West ORIGINATOR NAME: 015 TREAS
310
EFFECTIVE ENTRY DATE (SCHEDULED PAYMENT DATE) : June 17,
20
SETTLEMENT DATE (ACTUAL PAYMENT DATE) : June 17,
20
AMOUNT: 3,359.54 INDIVIDUAL ID:
0160000381 51800
RECEIVER ACCOUNT: 4020547823 TRACE NUMBER:
101036155668562
TRANS TYPE: Automated deposit STANDARD ENTRY CLASS CODE:
CCD

-

ADDENDA
RECORD(S)

-

RMR*IV*NO-INVOICE*PI*3359.54*17-FBI-
002694\

CITY OF WESTBROOK, MAINE

IN CITY COUNCIL

Date: August 3, 2020

Order: 2020-100

AUTHORIZING PAYMENT FOR ANNUAL EMAIL ARCHIVE MAINTENANCE SUPPORT & AMENDING ANNUAL VENDOR LIST

That the Westbrook City Council hereby authorizes an expenditure in the amount of $5,999 to Jatheon Technologies of Toronto, Canada for annual support of email archive maintenance, as outlined in the attached exhibit; and further authorizes an amendment to Order 2020-73 adopted on July 6, 2020, entitled *Approving the FY 2020-2021 General Fund, Recreation Fund & Parking Garage Fund Annual Vendor Lists* to include the following item:

General Fund Vendor List

Account Number	Account Name	Vendor
54330	Tech Consult – Maintenance	Jatheon

Funds available in budget line 10001530-54330

First Reading: August 3, 2020 Second and Final Reading:

Attest:

City Clerk Mayor

CITY OF WESTBROOK, MAINE

2 York Street, Westbrook, ME 04092

REQUEST FOR COUNCIL ACTION

*Requests are due to the City Clerk two Fridays prior to a Council meeting. If expenditure/acceptance of funds is involved, Finance Department approval is required **prior** to submission.*

PROPOSED TITLE: Authorizing Annual Email Archive Maintenance Support

REQUESTED BY: Greg Hamilton

DATE: 07/27/2020

SUMMARY:

Request to authorize payment of annual support for email archive server maintenance and to add Jatheon Technologies of Toronto, Canada to the annual vendor list.

This server purchase was approved by Council (Order # 2019-28) last fiscal year.

BUDGET LINES AFFECTED (IF APPLICABLE):

10001530-54330

$5999.00

P.O. Please

IT 54530

JATHEON
DATA | KNOWLEDGE | INSIGHT

90 Richmond St. East, Suite #200, Toronto, Ontario M5C 1P1, Canada

INVOICE

Vendor #434

REQ#1285

Billing Address:
City of Westbrook
2 York St
WESTBROOK ME 04092

Invoice Date
06 May 2020

Invoice Number
INV-2915

Due Date*:
05 Jun 2020

Reference

HST
835078270 RT0001

Shipping Address

Description	Quantity	Unit Price	Discount %	Amount USD
Jatheon cCore 8x Email Archiving Maintenance Support-June 20, 2020 to June 19, 2021	1.00	5,999.00		5,999.00
			Subtotal	5,999.00
			Total No Tax 0%	0.00
			Invoice Total USD	5,999.00
			Total Net Payments USD	0.00
			Amount Due USD	**5,999.00**

Please remit payment via wire payment to:
Bank Name: TD Canada Trust
Bank Address: Toronto Dominion Centre Branch, 55 King Street West & Bay Street, Toronto, Ontario, M5K 1A2, Canada
Account Name: Jatheon Technologies
Canadian Dollar Payment:
Transit#: 10202; Institution #: 004; Acct #: 0690-5268722; Swift Code: TDOMCATTTOR; ABA: 026009593
US Dollar Payment:
Transit #: 10202; Institution #: 004; Account#: 0690-7372877; Swift Code: TDOMCATTTOR; ABA: 026009593

DATE: 6.11.2020
ACCOUNT: PO Attached
AUTH. BY:
AMOUNT: 5999.00

We encourage you to take advantage of our early payment discount. Any payment received Net 10 will be subject to a 2% discount.
Monthly Interest of 1.5% will apply to Invoices that are 30 days past the due date.

Bill To

CITY HALL
2 YORK STREET
WESTBROOK, ME 04092
Phone: 207-854-9105

Purchase Order

Fiscal Year 2020

THIS NUMBER MUST APPEAR ON ALL INVOICES, PACKAGES AND SHIPPING PAPERS.

Purchase Order # **2021064**

Delivery must be made within doors of specified destination.

Vendor

Jatheon Technologies Inc
90 Richmond St East, Suite 200
Toronto, ON M5C 1P1

Ship To

CITY HALL
2 YORK STREET
WESTBROOK, ME 04092
Phone: 207-854-9105

VENDOR PHONE NUMBER	VENDOR FAX NUMBER	REQUISITION NUMBER	DELIVERY REFERENCE
		1285	

DATE ORDERED	VENDOR NUMBER	DATE REQUIRED	FREIGHT METHOD/TERMS	DEPARTMENT/LOCATION
06/11/2020	434			INFORMATION TECHNOLOGY

NOTES

Jatheon cCore 8x email Archivi

The Above Purchase Order Number Must Appear On All Correspondence - Packing Sheets And Bills Of Lading

ITEM #	DESCRIPTION / PART #		QTY	UOM	UNIT PRICE	EXTENDED PRICE
1	Jatheon cCore 8x email Archiving maintenance support June20,2020 to June 19,2021 GL Account: 10001530 - 54330	$5,999.00	1.0	EACH	$5,999.00	$5,999.00

GL SUMMARY

10001530 - 54330	$5,999.00

Tyler Town's "Standard Terms and Conditions for Purchase Orders" are made a part of, and incorporated into, this Purchase Order by this reference. They can be viewed at http://www.tylertech.com. Any performance by Vendor pursuant to this Purchase Order constitutes Vendor's acknowledgement that Vendor has read and agreed to the referenced Standard Terms and Conditions.

Total Ext. Price	$5,999.00
Total Sales Tax	$0.00
Total Freight	$0.00
Total Discount	$0.00
Total Credit	$0.00
Purchase Order Total	**$5,999.00**

Suzanne Knight
Authorized Signature

Authorized Signature

Department Copy

CITY OF WESTBROOK, MAINE

IN CITY COUNCIL

Date: August 3, 2020

Order: 2020-101

AUTHORIZING AWARD OF BID FOR TWO POLICE CRUISERS

That the Westbrook City Council hereby authorizes an award of bid to Rowe Ford of Westbrook, ME in the total amount of $113,849 for two 2021 Ford Explorer Police Interceptors.

Funds available in budget line 10009220-59400

First Reading: August 3, 2020 Second and Final Reading:

Attest:

City Clerk Mayor

CITY OF WESTBROOK, MAINE

2 York Street, Westbrook, ME 04092

REQUEST FOR COUNCIL ACTION

*Requests are due to the City Clerk two Fridays prior to a Council meeting. If expenditure/acceptance of funds is involved, Finance Department approval is required **prior** to submission.*

PROPOSED TITLE: Award of Bid and expenditure of funds for two police cruisers: Rowe Ford, 91 Main Street Westbrook, Maine $113,849.00.

REQUESTED BY: Captain Sean Lally

DATE: 07/24/2020

SUMMARY:

The Westbrook Police Department solicited bids for two 2021 Ford Explorer Police Interceptors. Bids were opened on 7-22-20 and there were three bids submitted. The two lowest bids were from Casco Bay Ford ($112,243.00) and Rowe Ford ($113,849.00). The difference in price is less than 2%, therefore Rowe should be awarded the bid based on the City's purchasing policy.

Both vehicles are marked and will be outfitted for use in the patrol division of the Department.

Rowe Ford's proposal satisfies all specifications set forth in the bid packet and is supported by the administration. Funds are available in the stated account.

Approved for $ 115,384 thru FB not leased.

BUDGET LINES AFFECTED (IF APPLICABLE):

10009220-59400

SMKnight

Bid Tabulation
Police Interceptor Utility

Company Name	Total Bid Price	
	Patrol #1	Patrol #2
Casco Bay Ford	$ 55,944.00	$ 56,299.00
Rowe Westbrook	$ 57,102.00	$ 56,747.00
Stoneham Ford	$ 58,570.000	$ 59,045.00

,

Stoneham Motor Co.

Patrol 1 $58,570

Patrol 2 $ 59,045

Total **$117,615**

Casco Bay Ford

Patrol 1 $55,944

Patrol 2 $56,299

Total **$112,243**

Rowe Ford

Patrol 1 $56,747

Patrol 2 $57,102

Total $**113,849**

2% of 112,243 is $2244.86

112,243 + 2244.86= **$114,487.86**

Rowe is within 2% of Casco Bay's bid, therefore under the City's purchasing policy, Rowe should be awarded the bid.

CITY OF WESTBROOK, MAINE

2 York Street, Westbrook, ME 04092

COMMITTEE REFERRAL FORM

REFERRAL TITLE: **Street Light at 23 Everett Street**

REQUESTED BY: **Administration, on behalf of Daniel Tucker (Resident)**

DATE CREATED: **July 29, 2020**

COMMITTEE: **Facilities & Streets Committee**

Description of referral:

Daniel Tucker, resident at 23 Everett Street, submitted a request to the Public Services Department for the installation of a street light in front of his property. This request was forwarded to the City Administration so that a referral to the Facilities & Streets Committee could be drafted.

Name, address and telephone number of citizen(s) to contact for additional information:

Daniel Tucker
23 Everett Street
207-615-8119
dgtucker323@gmail.com